HARDINGE GRINDING GROUP

KELLENBERGER · JONES & SHIPMAN · HAUSER · TSCHUDIN · USACH · VOUMARD

Developing the best grinding concepts to produce Diesel or Gasoline injection components

燃油喷射系统精密零部件磨削方案

HARDINGE GROUP

1890
哈挺公司
创立

→ **1995**
收购瑞士
Kellenberger有限
公司

→ **2000**
收购瑞士
HAUSER, TRIPET, TSCHUDIN
磨削集团

→ **2008**
瑞士**Kellenberger**与
HAUSER, TRIPET, TSCHUDIN公司合并,
组成**HARDINGE GRINDING GROUP**

→ **2010**
收购英国
Jones & Shipman
磨床公司

→ **2012**
收购美国**USACH**
磨削技术公司

→ **2014**
收购**VOUMARD**产品线

HARDINGE GRINDING GROUP
KELLENBERGER · JONES & SHIPMAN · HAUSER · TSCHUDIN · USACH · VOUMARD

Facts and Figures

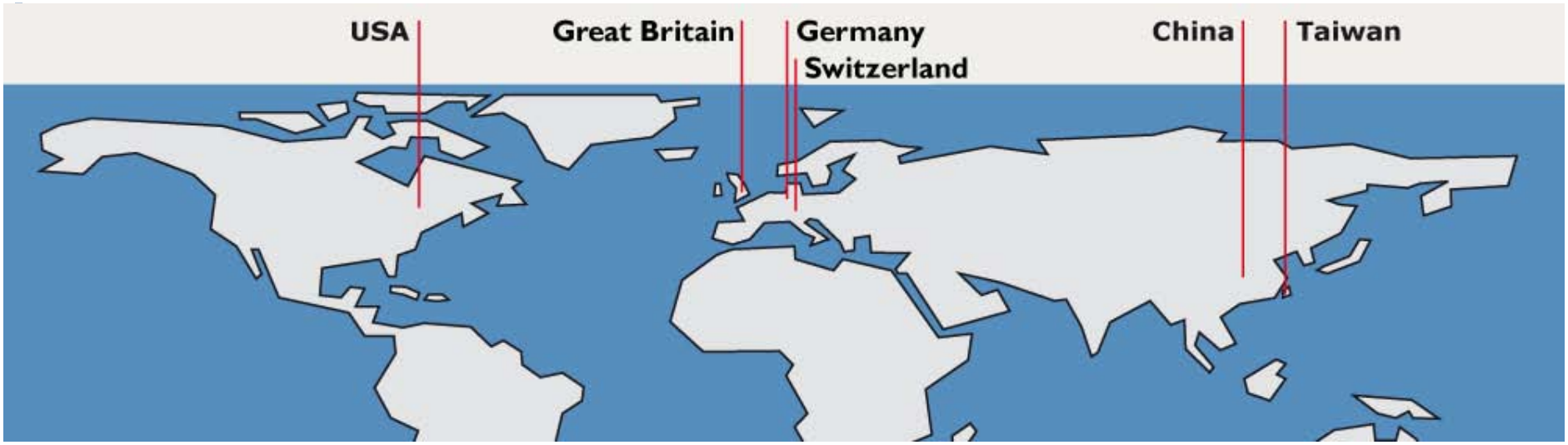

- Manufacturing and assembling in USA, China, UK, Germany, Switzerland and Taiwan
- About 1100 employees worldwide

HARDINGE GRINDING GROUP

- 超精密内外圆磨床及创新磨削系统----------瑞士KELLENBERGER，创立于1917年

  KELLENBERGER

- 大批量生产型外圆磨床及磨削技术，
  燃油喷射系统关键零部件制造商----------瑞士TSCHUDIN，创立于1948年

  TSCHUDIN

- 超精密坐标磨床及磨削技术，
  全球坐标磨床第一品牌----------瑞士HAUSER，创立于1898年

  HAUSER

- 高精度数控平面成型、缓进给磨床，内外圆磨床----------英国，创立于1912年

  JONES & SHIPMAN

- 大批量生产型内外圆磨床及磨削技术----------美国，创立于1985年

  USACH

- 超精密数控内圆磨床----------瑞士，创立于1939年

  VOUMARD

用于燃油喷射系统零件的生产型磨床

生产型外圆磨床

TSCHUDIN T35

TSCHUDIN T25

生产型内孔磨床

VOUMARD VM 110

VOUMARD VM130

Our daily business….

Our daily business….

Automotive Fuel Injection

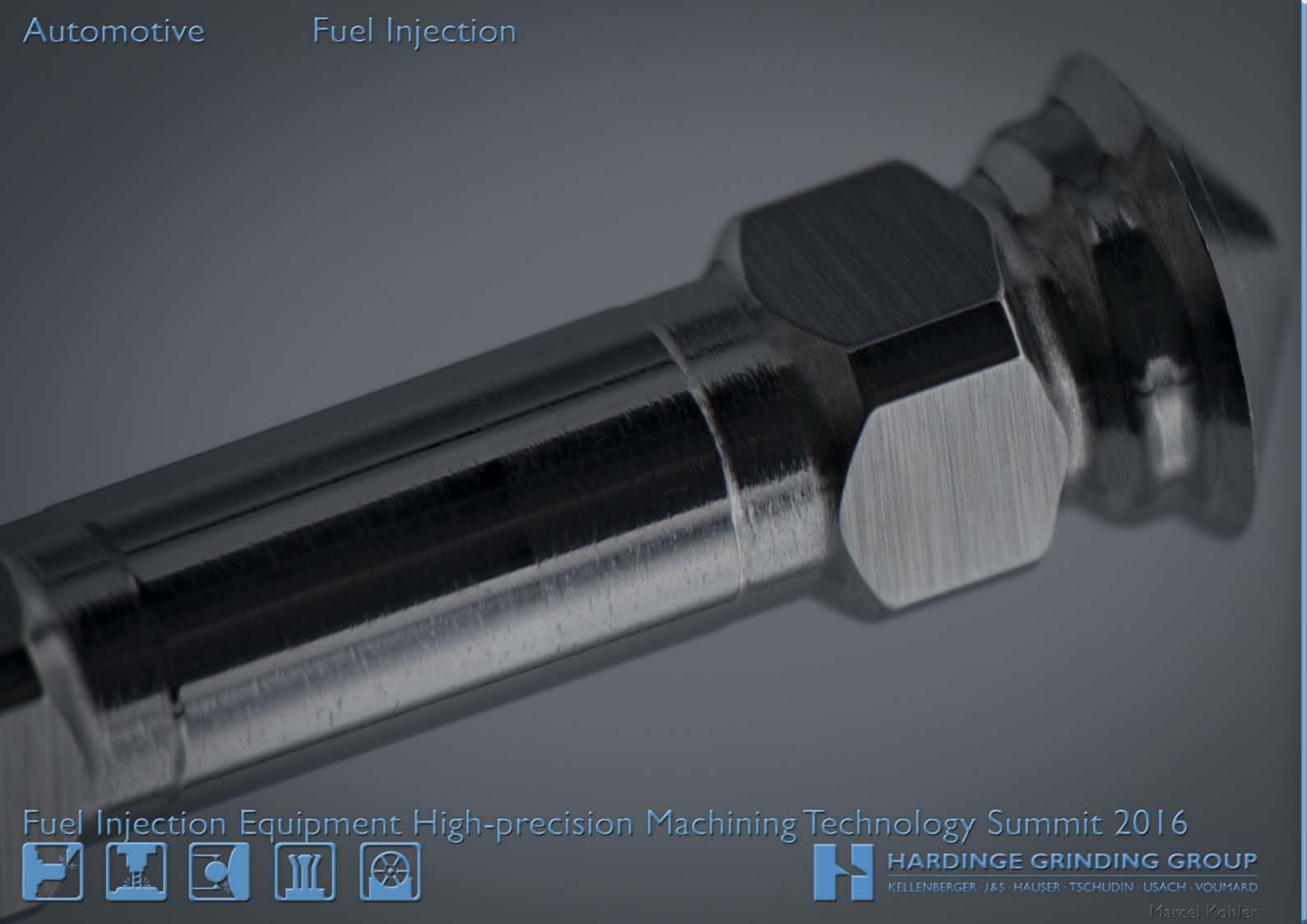

Fuel Injection Equipment High-precision Machining Technology Summit 2016

HARDINGE GRINDING GROUP

KELLENBERGER · J&S · HAUSER · TSCHUDIN · USACH · VOUMARD

Marcel Kohler

Automotive Fuel Injection Nozzle Body Tschudin T35

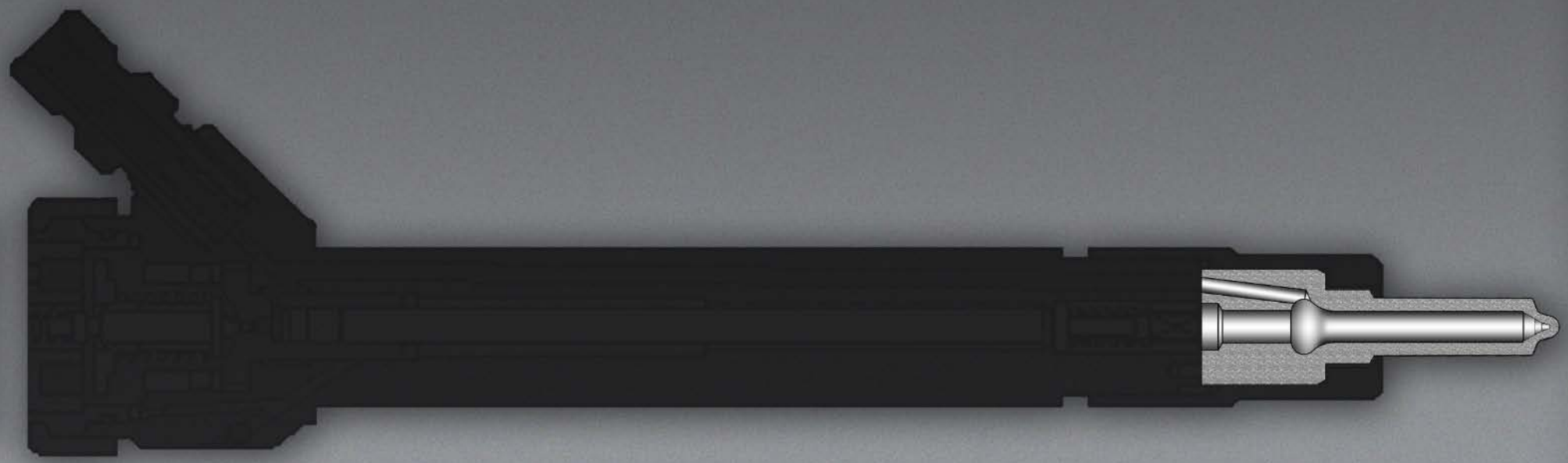

Fuel Injection Equipment High-precision Machining Technology Summit 2016

HARDINGE GRINDING GROUP

KELLENBERGER J&S HAUSER TSCHUDIN USACH VOUMARD

Marcel Kohler

Automotive Fuel Injection Nozzle Body Tschudin T35

Cycle Time 15-20 sec.

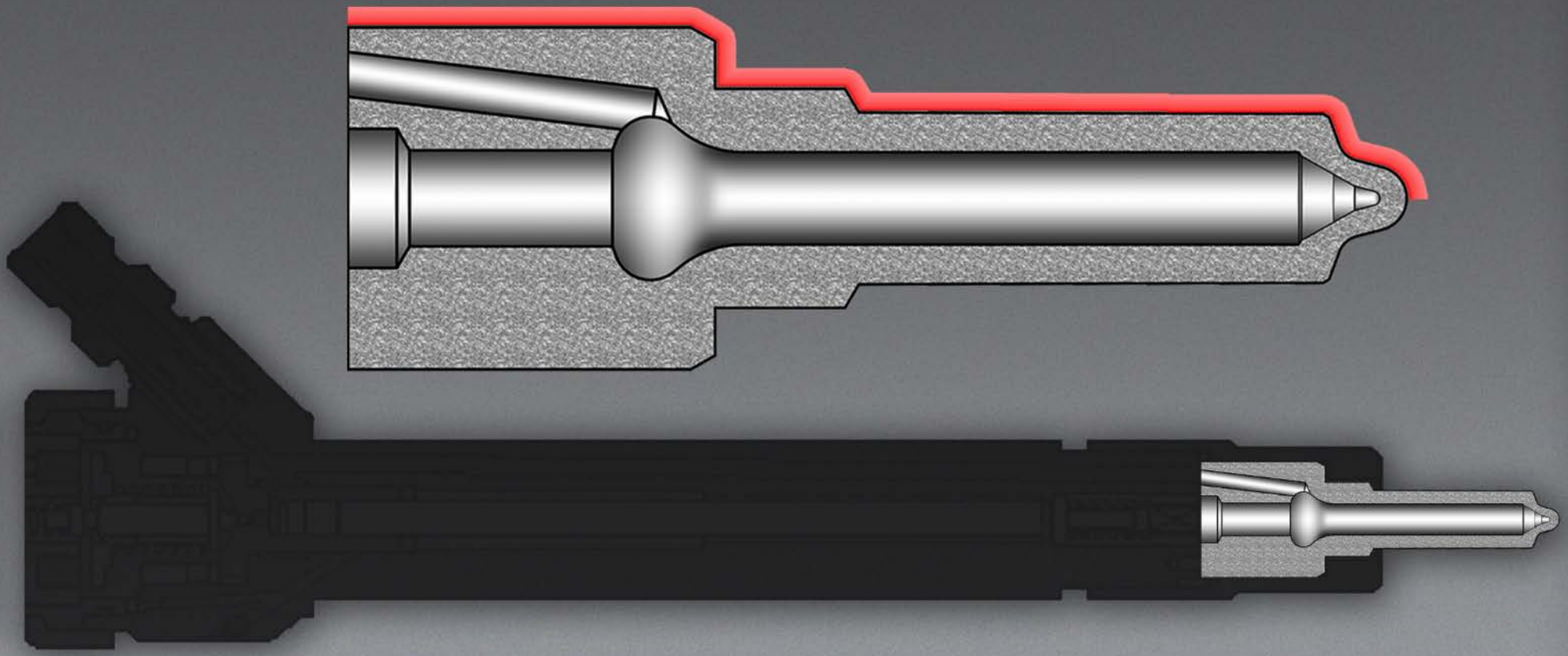

Fuel Injection Equipment High-precision Machining Technology Summit 2016

HARDINGE GRINDING GROUP

KELLENBERGER · J&S · HAUSER · TSCHUDIN · USACH · VOUMARD

Marcel Kohler

Automotive Fuel Injection Nozzle Body Tschudin T35

Fuel Injection Equipment High-precision Machining Technology Summit 2016

HARDINGE GRINDING GROUP

KELLENBERGER · IAS · HAUSER · TSCHUDIN · USACH · VOUMARD

Marcel Kohler

Nozzle body-Grinding of the complete OD

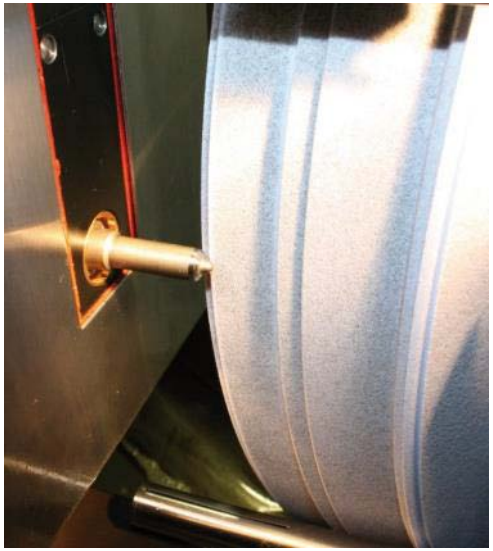

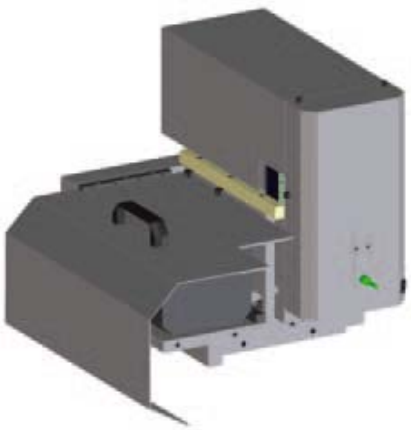

Inner ring drive unit

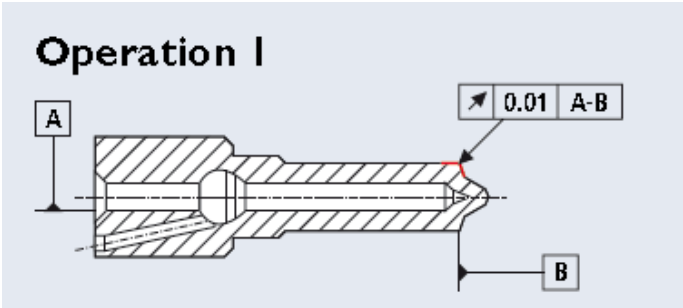

- The nozzle body is driven using an inner ring drive on the centering pin
- By inclining the position of the drive ring, the workpiece is pressed against the centering device of the inside bore
- The centering bevel for Operation 2 is ground un-supported
- Grinding is carried out using the main grinding wheel

Nozzle body-Grinding of the complete OD

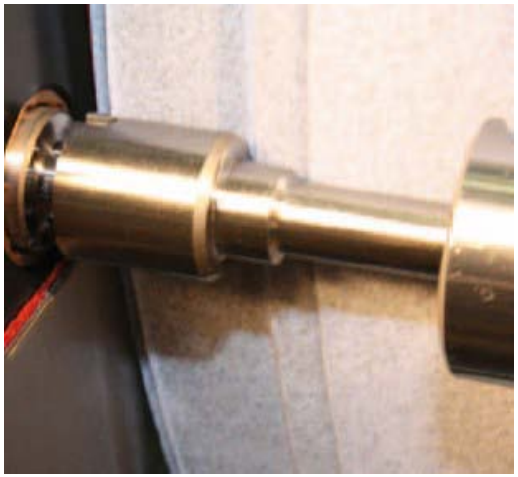

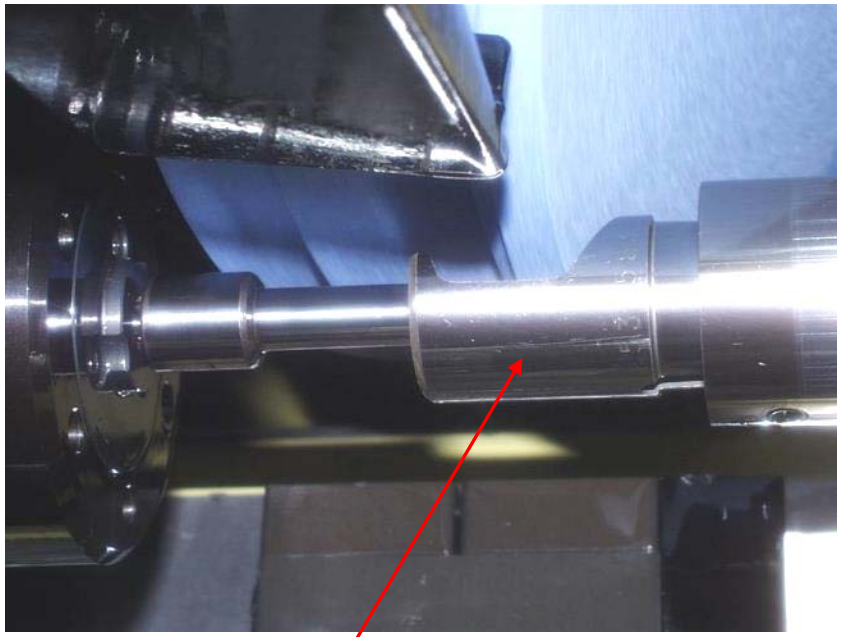

Special self centering steady-center

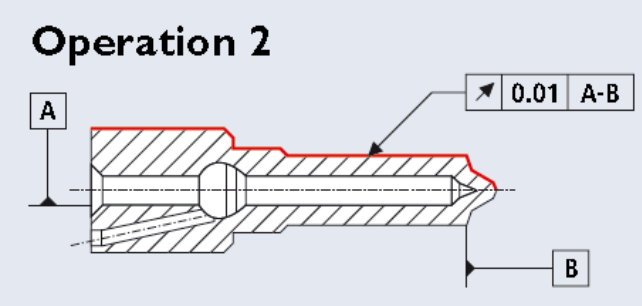

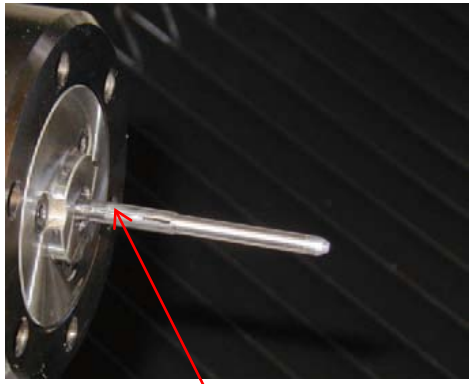

Slotted-head driver

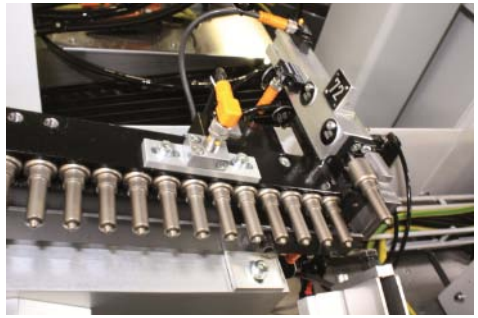

Auto loading solution

Grinding of the front end of injection nozzles

Grinding of 2 components in one cycle operation

Auto loading

Automotive Fuel Injection Nozzle Body Voumard VM-130

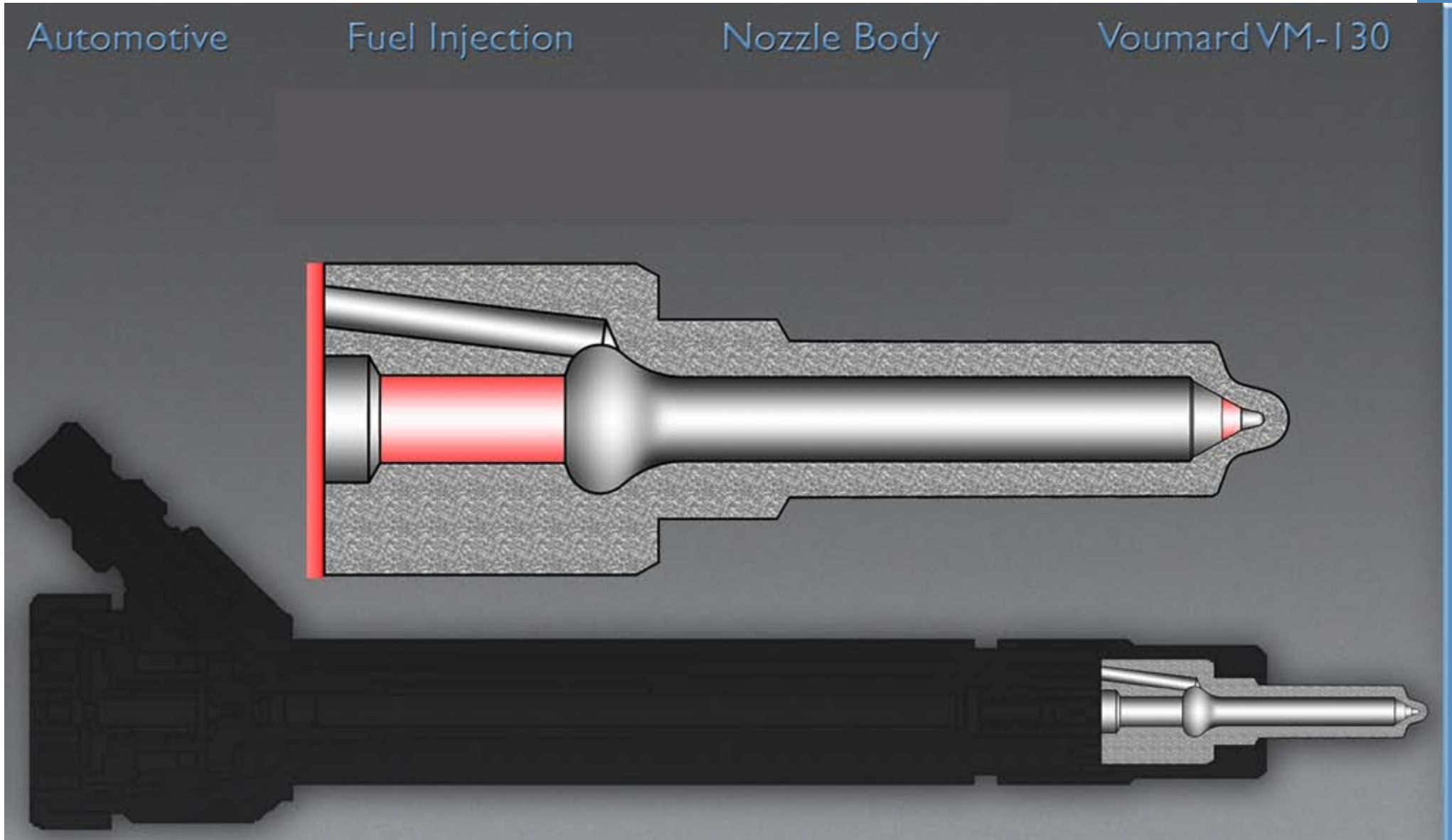

Fuel Injection Equipment High-precision Machining Technology Summit 2016

HARDINGE GRINDING GROUP

KELLENBERGER · IAS · HAUSER · TSCHUDIN · USACH · VOUMARD

Marcel Kohler

Nozzle Grinding on VOUMARD VM 130

- Small footprint
- High throughput
- Ready for automated work piece handling
- Proven process stability
- In-process gauging possible
- Customized clamping solutions available
- For small and medium sized work pieces

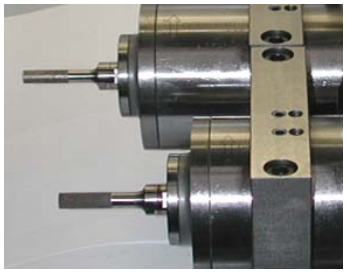

Two Spindles Configuration

Three Spindles Configuration

Four Spindles Turret

Nozzle Grinding on VOUMARD VM 130

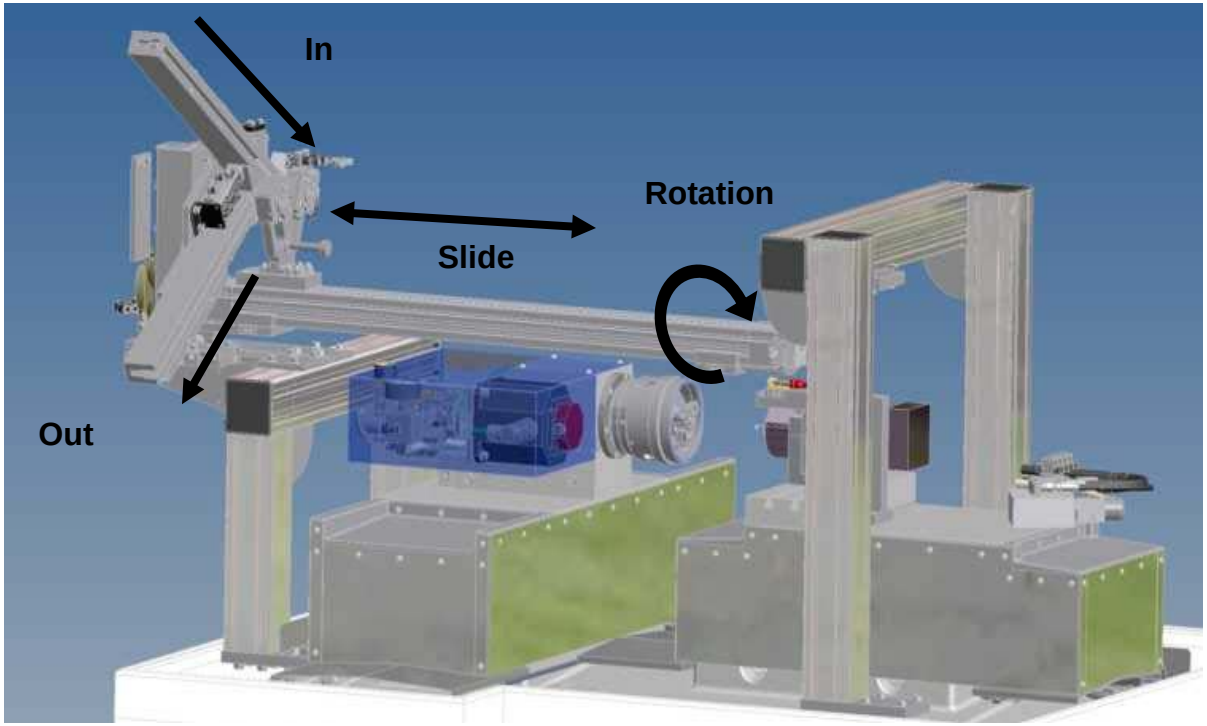

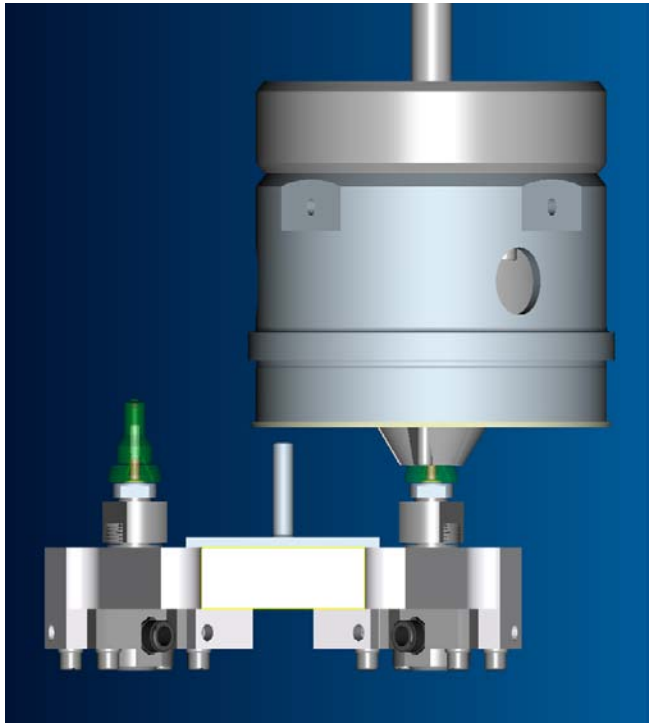

Nozzle Grinding on VOUMARD VM 130

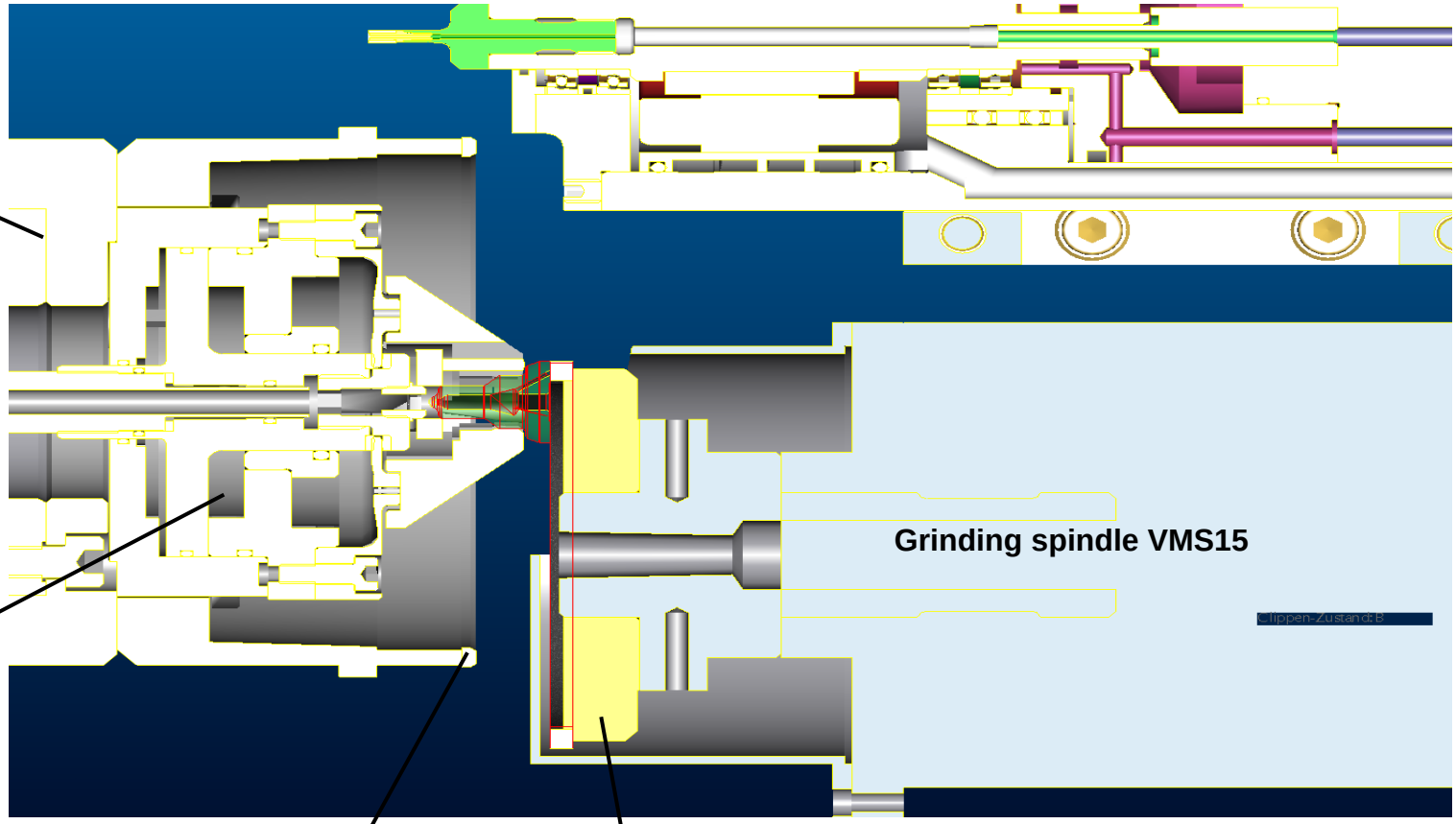

Grinding time 22s
Stock removal 0,25mm

Nozzle Grinding on VOUMARD VM 130

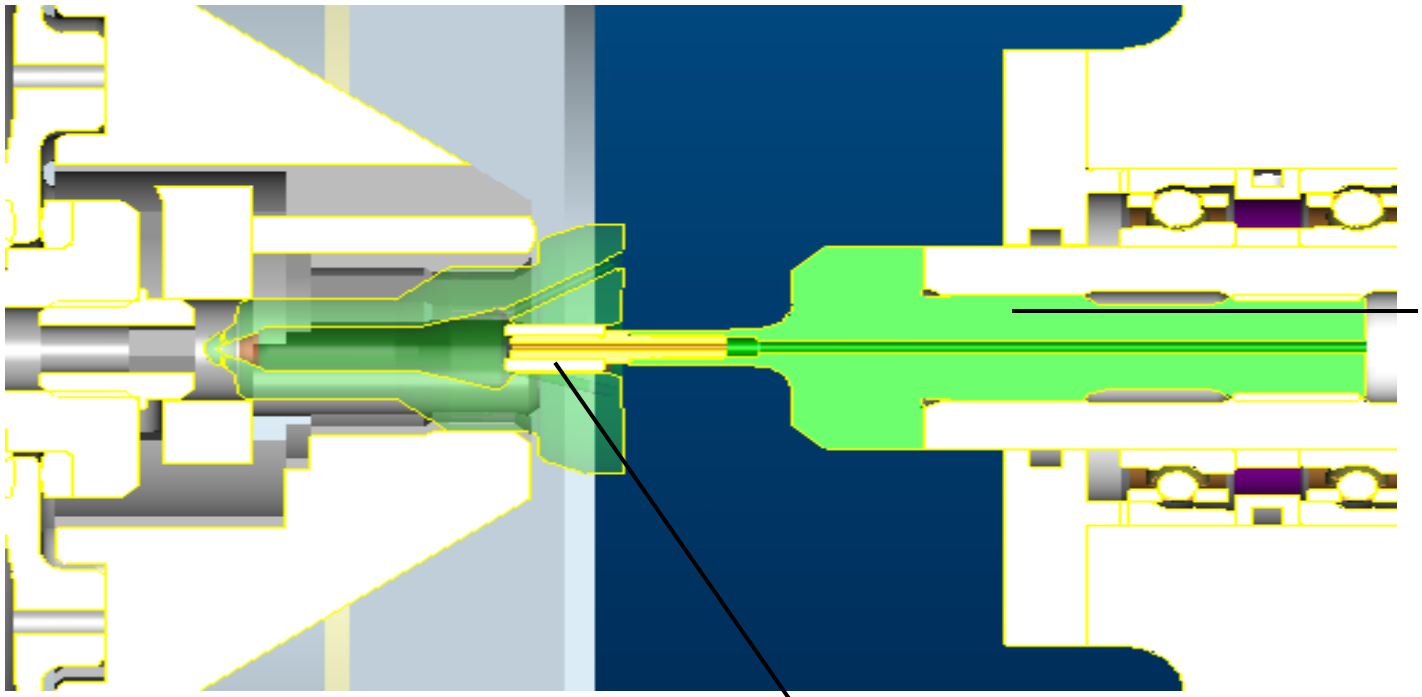

Grinding spindle VMX 90 A
with internal coolant supply

Quill (tungsten carbide)
with internal coolant supply

Bore wheel Vit CBN

Grinding time 20s
Stock removal 0,25mm

Nozzle Grinding on VOUMARD VM 130

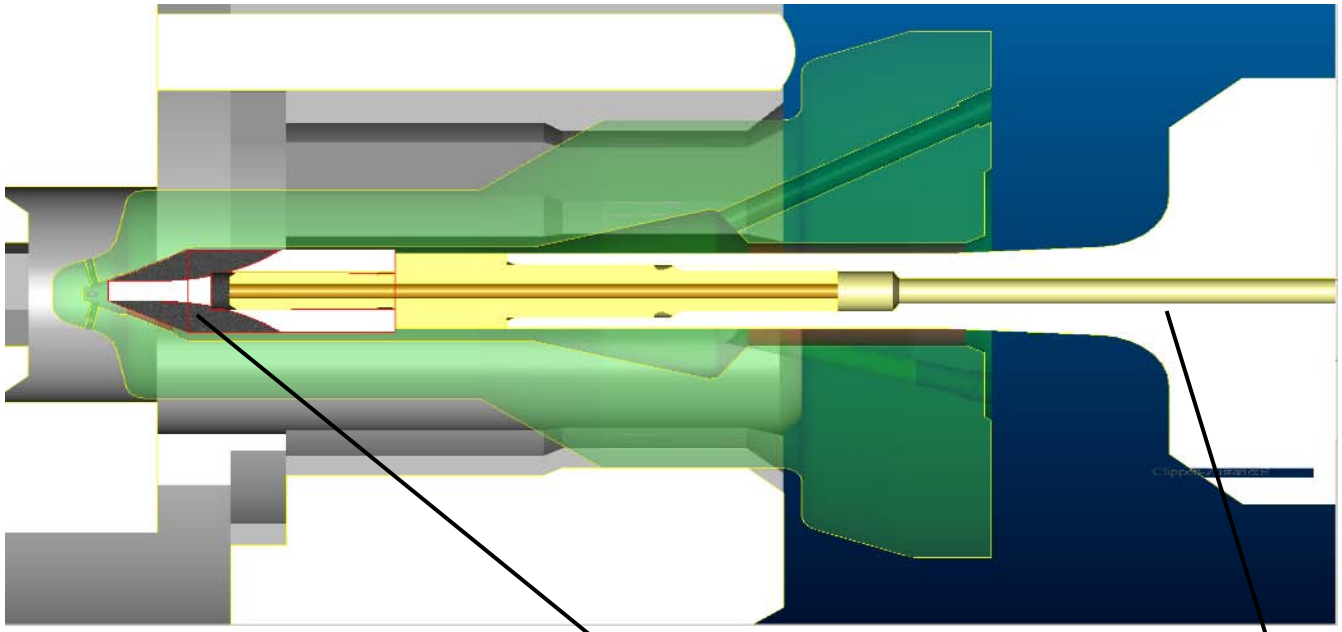

Grinding spindle VMX 90 A
with internal coolant supply

Quill (tungsten carbide)
with internal coolant supply

Seat wheel Vit CBN

Grinding time 26s
Stock removal 0,25mm

Nozzle Grinding on VOUMARD VM 130

Achieved quality (8h run)

Seat:
Roundness:0,26 … 0,44µm
Straightness: 0,11 … 0,42µm
Surface Ra:0,06 … 0,09µm
Coax to bore: 0,2 … 1,42µm

Face:
Flatness: 1,1 … 1,4µm
Surface Ra: 0,11 … 0,16µm

Bore:
Roundness: 0,38 … 0,56µm
Straightness: 0,11 … 0,32µm
Surface Ra: 0,08 … 0,11µm

Cycle time: 80s

Nozzle Grinding on VOUMARD VM 130

Stability bore diameter (8h run)

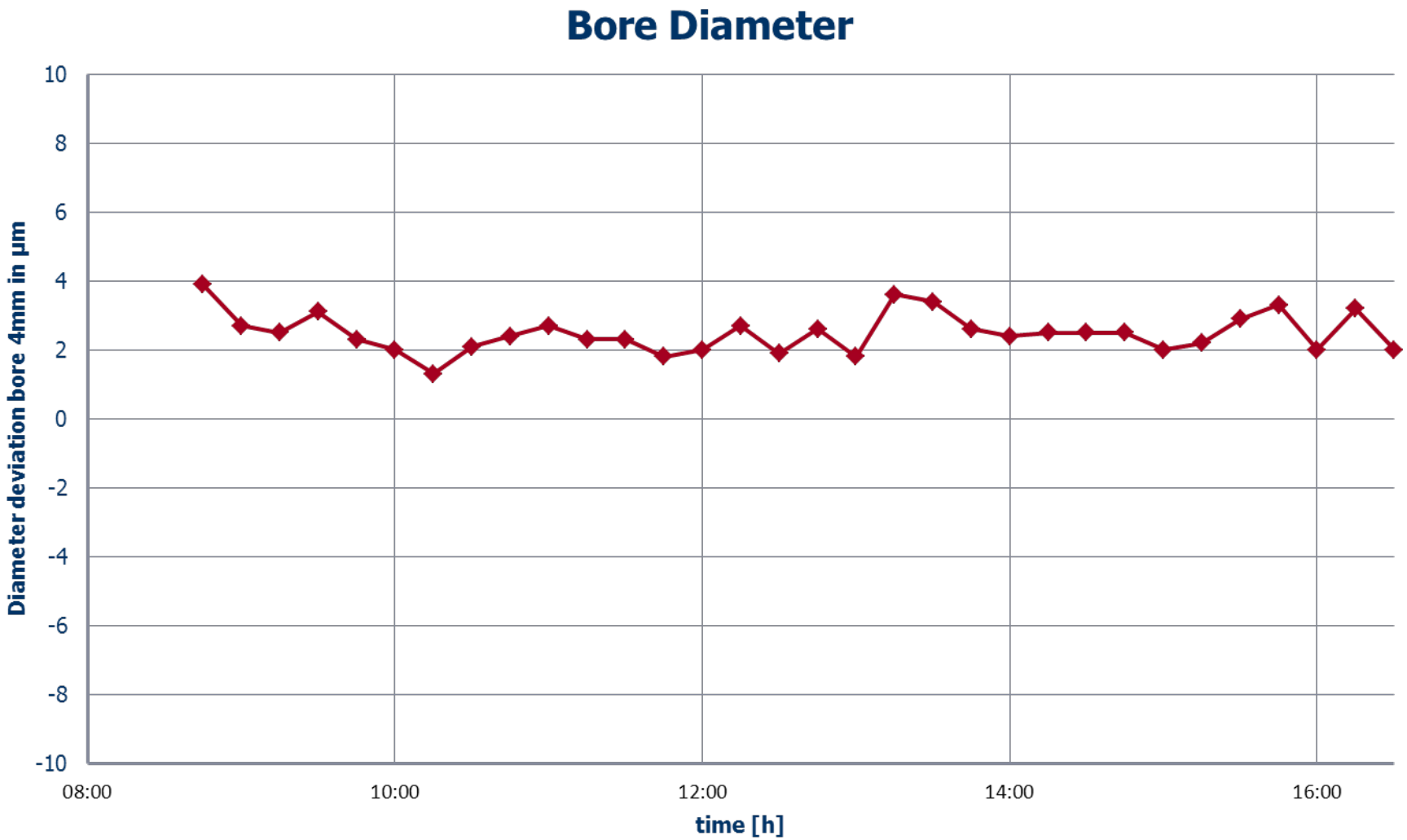

Nozzle Grinding on VOUMARD VM 130

Stability bore roundness (8h run)

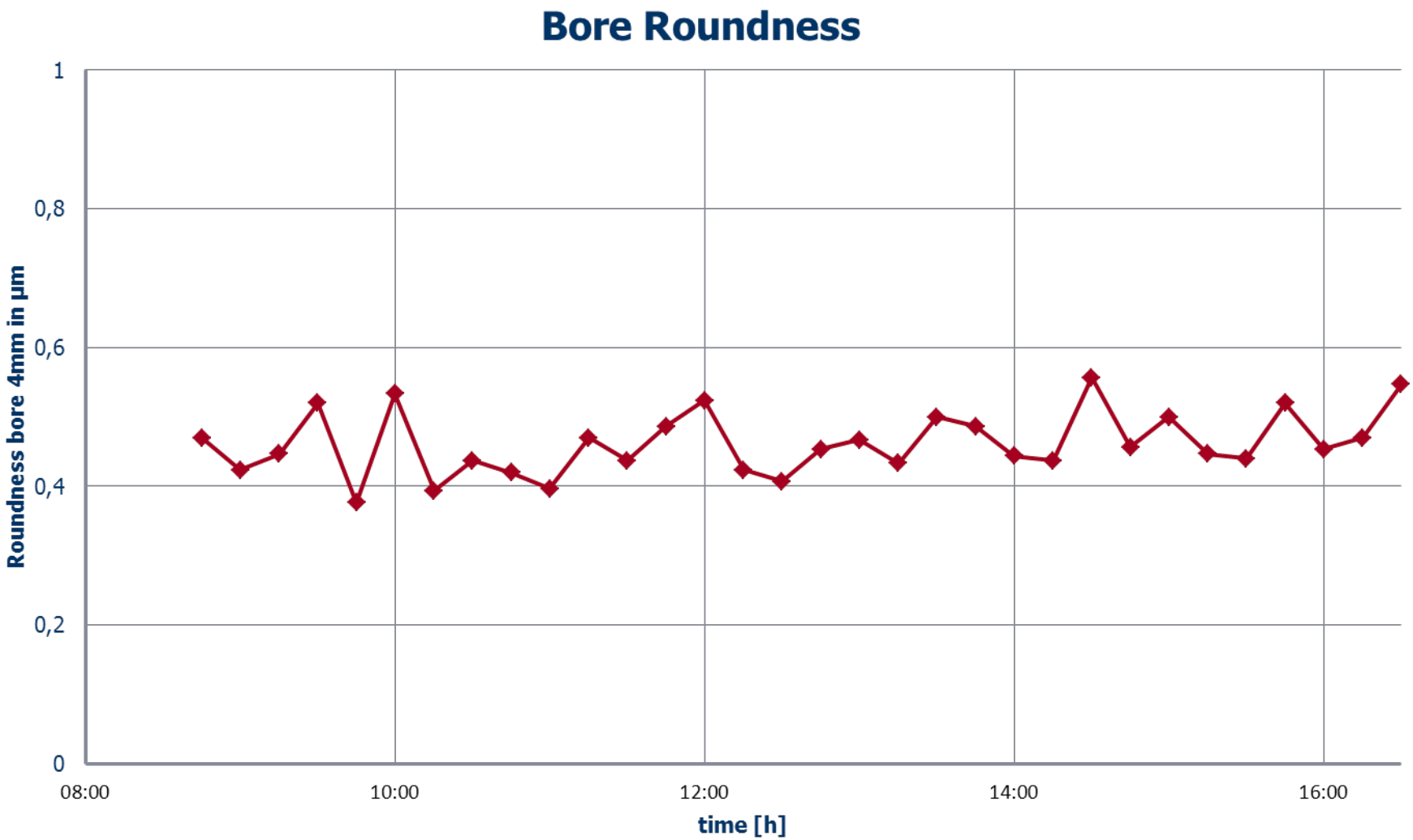

Automotive Fuel Injection Nozzle Needle Tschudin T35

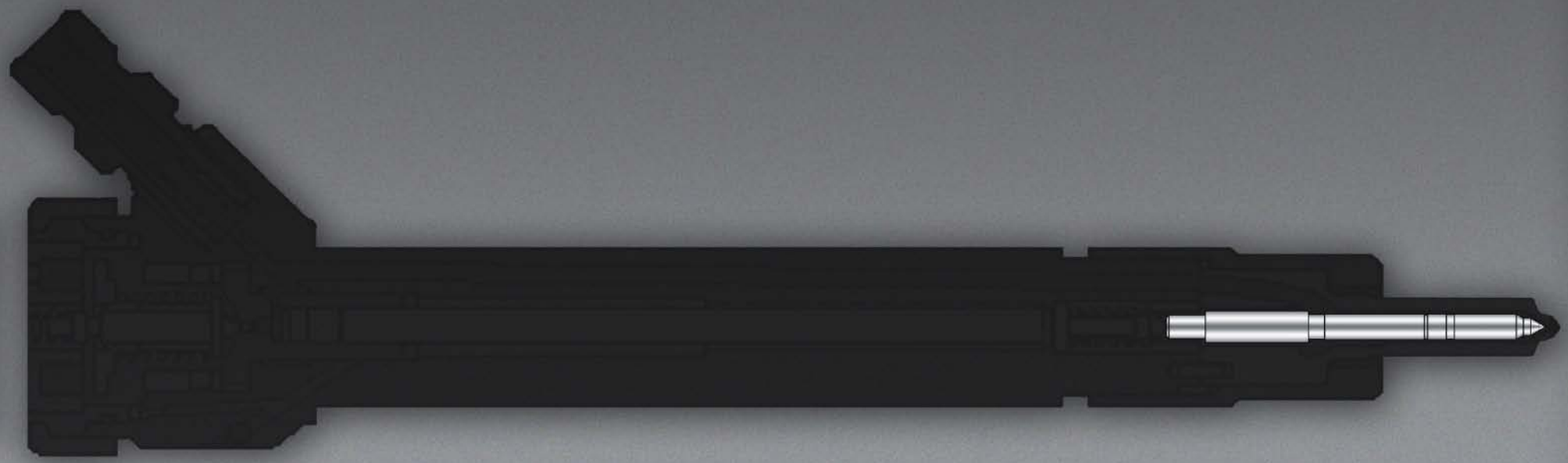

Fuel Injection Equipment High-precision Machining Technology Summit 2016

HARDINGE GRINDING GROUP

KELLENBERGER J&S HAUSER TSCHUDIN USACH VOUMARD

Marcel Kohler

Prismatic grinding system

hydraulic driven tilt unit

end stop

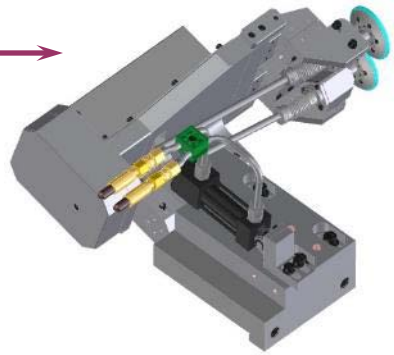

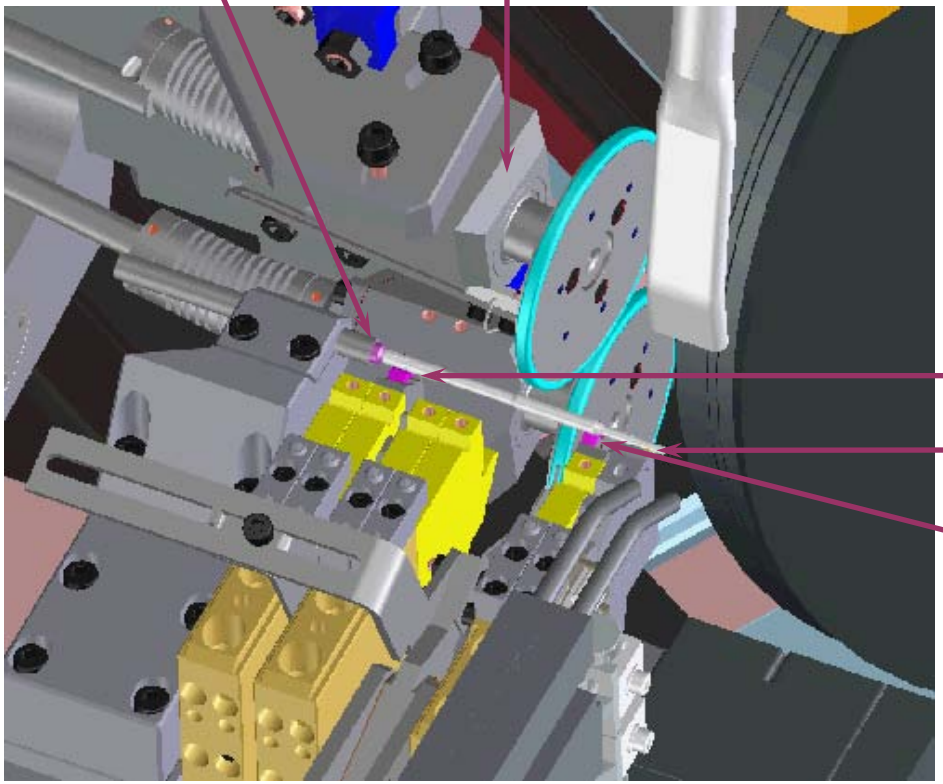

fixed prism

workpiece

damped prism (optional)

prism base unit

prism with PCD - inserts

Prism base unit

depth adjusting device

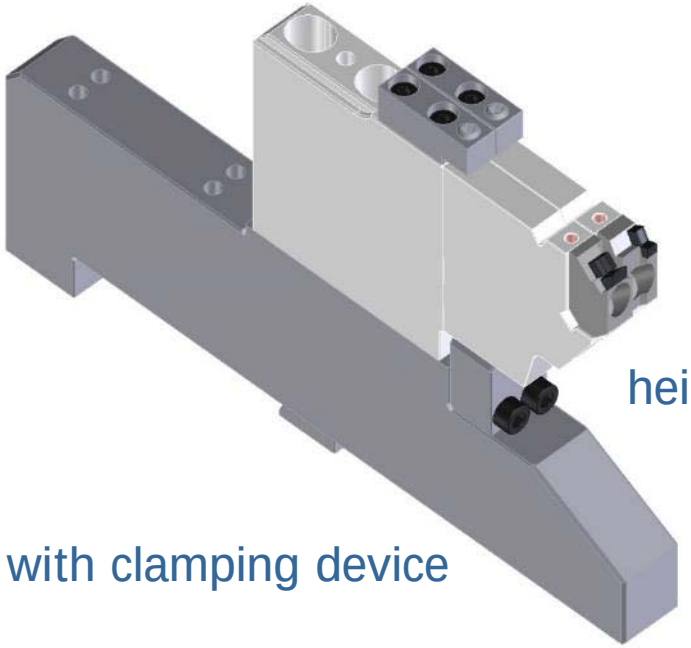

prism base with
PCD inserts
and
height adjusting device

base body with clamping device

height & depth are finely adjustable (manual)

prismatic grinding system

prism with PCD - inserts

Prism with PCD – inserts (fixed + damped)

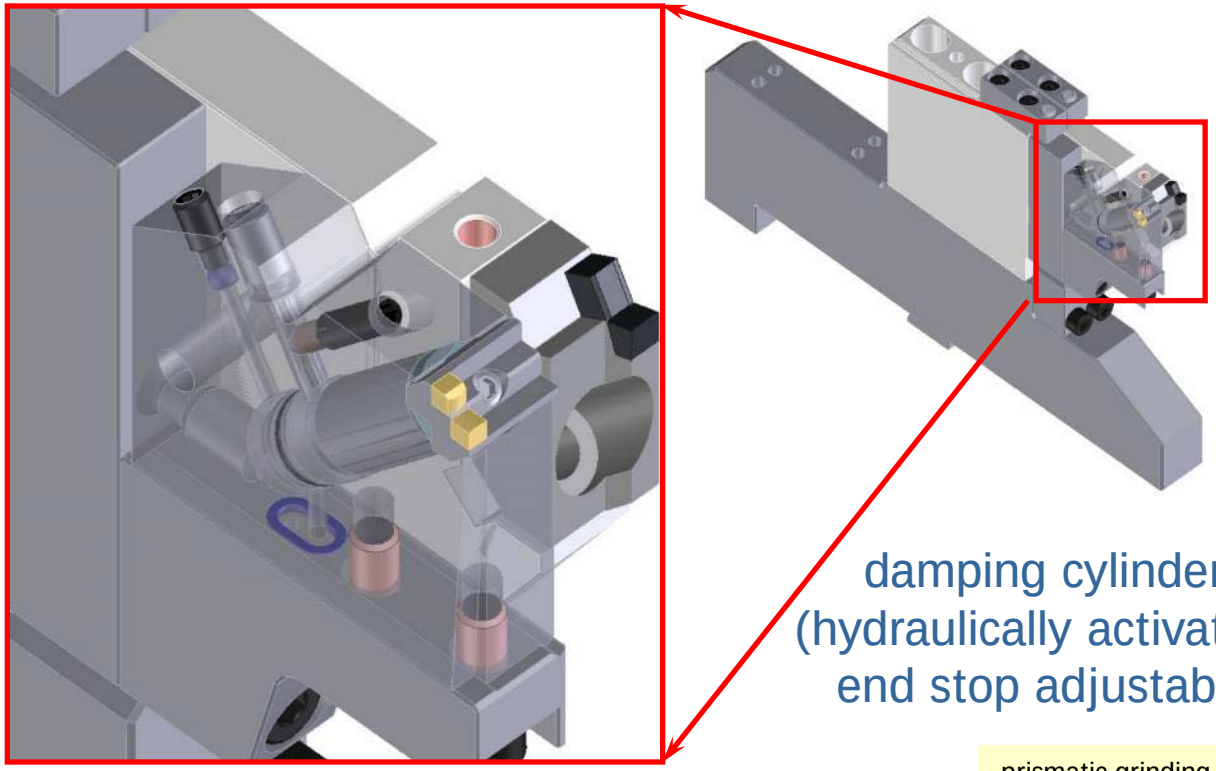

damping cylinder
(hydraulically activated)
end stop adjustable

prismatic grinding system

prism base unit

Cycle Time 12 sec.

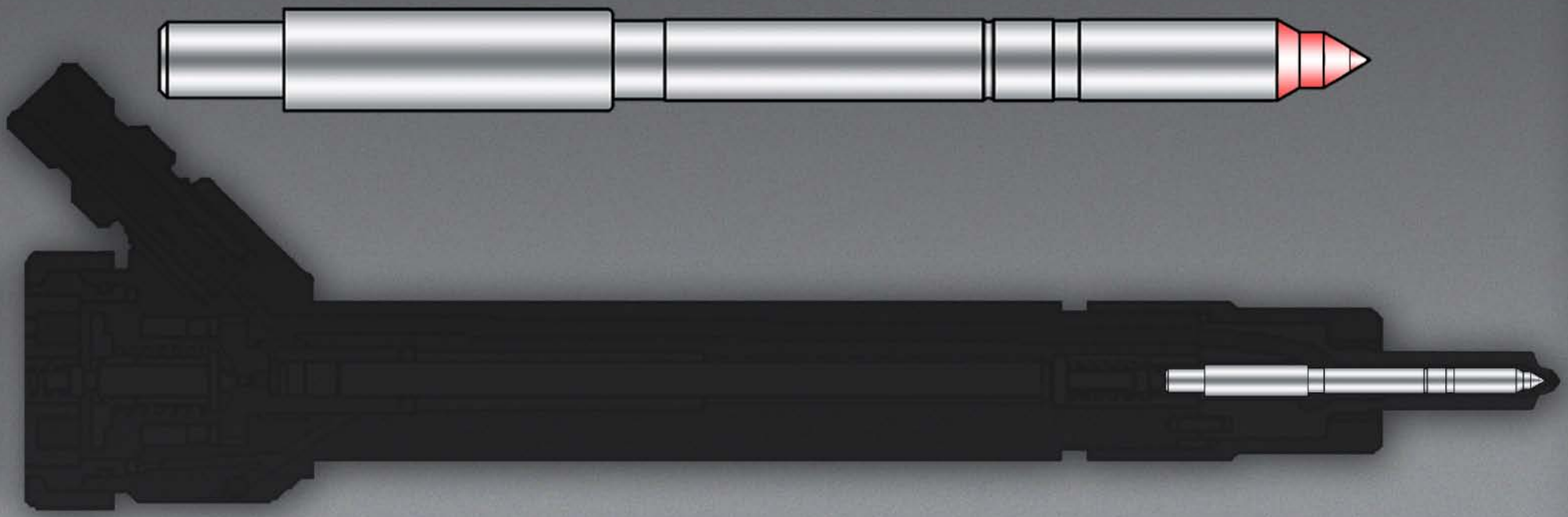

HARDINGE GRINDING GROUP
KELLENBERGER · J&S · HAUSER · TSCHUDIN · USACH · VOUMARD
Marcel Kohler

Automotive Fuel Injection Nozzle Needle Tschudin T35

Fuel Injection Equipment High-precision Machining Technology Summit 2016

HARDINGE GRINDING GROUP

KELLENBERGER · J&S · HAUSER · TSCHUDIN · USACH · VOUMARD

Marcel Kohler

针阀磨削

2 Components in grinding process of 4 flats with CBN wheels

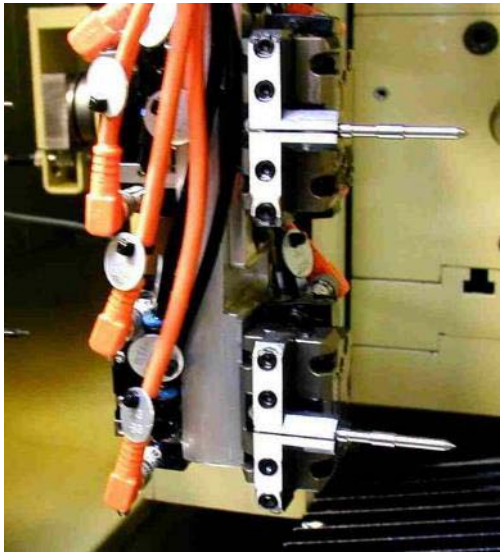

Double automatic loader

Automotive Fuel Injection Control Shaft Tschudin T25

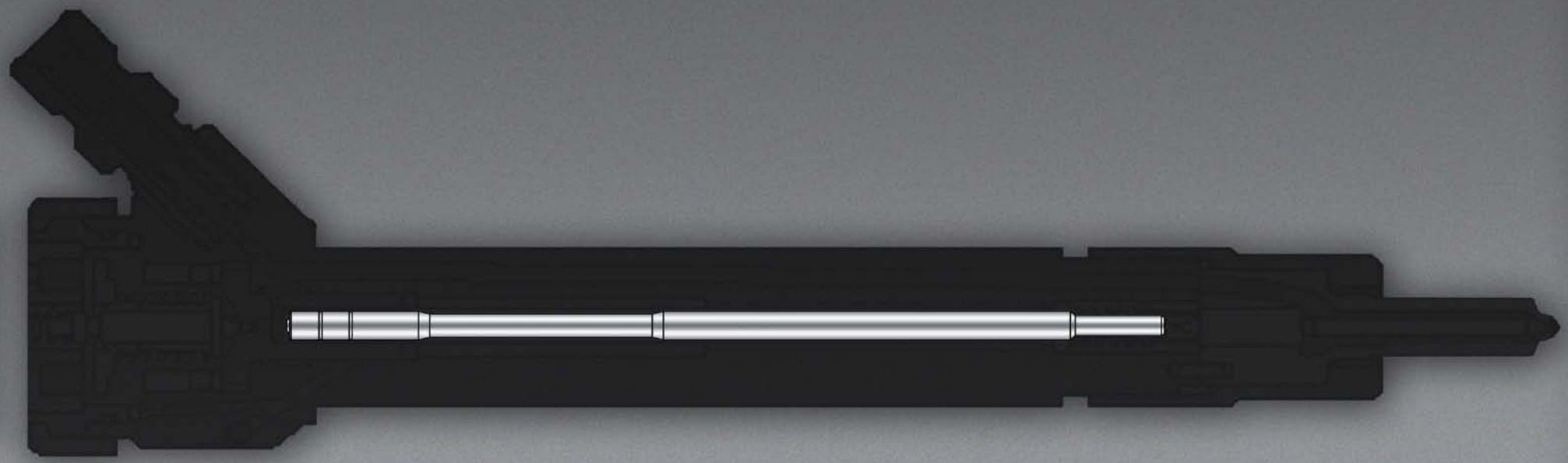

Fuel Injection Equipment High-precision Machining Technology Summit 2016

HARDINGE GRINDING GROUP

KELLENBERGER J&S HAUSER TSCHUDIN USACH VOUMARD

Marcel Kohler

Cycle Time 14 sec.

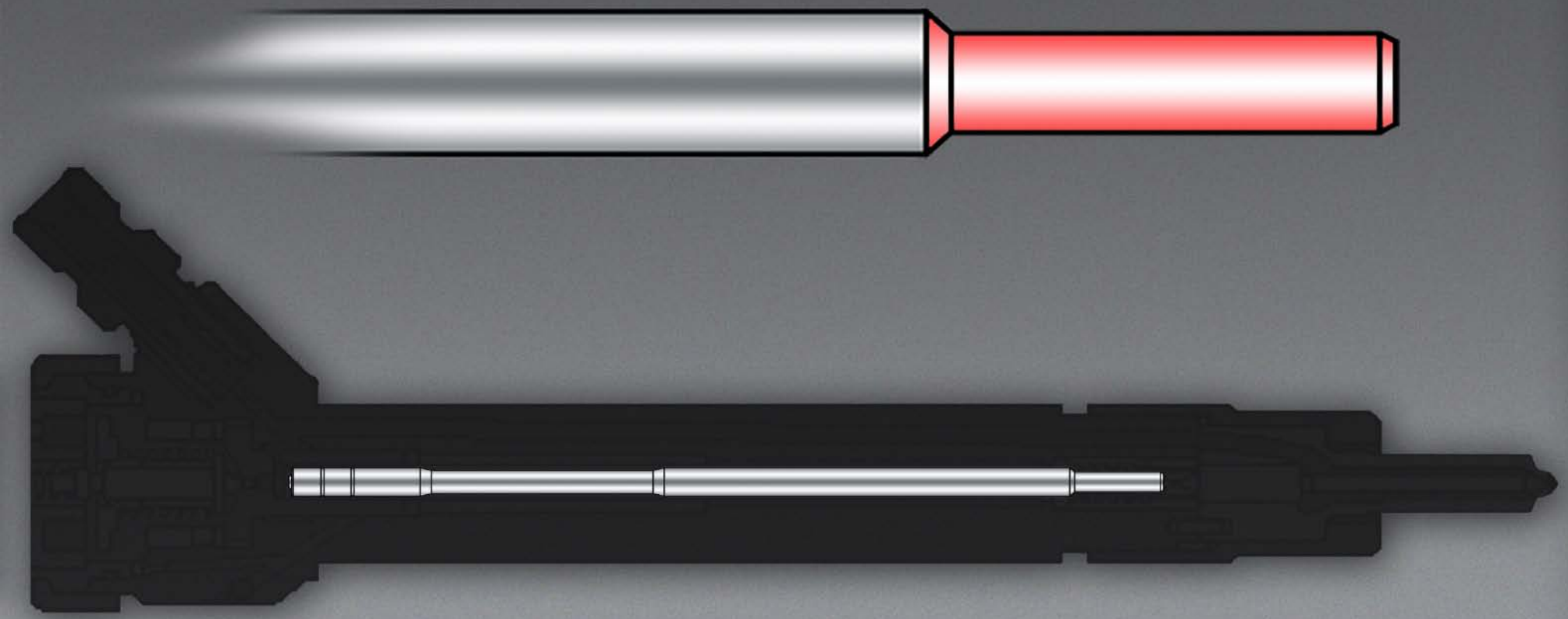

HARDINGE GRINDING GROUP
KELLENBERGER · J&S · HAUSER · TSCHUDIN · USACH · VOUMARD
Marcel Kohler

Automotive Fuel Injection Control Shaft Tschudin T25

Fuel Injection Equipment High-precision Machining Technology Summit 2016

HARDINGE GRINDING GROUP

KELLENBERGER · JAS · HAUSER · TSCHUDIN · USACH · VOUMARD

Marcel Köhler

Cycle Time 12 sec.

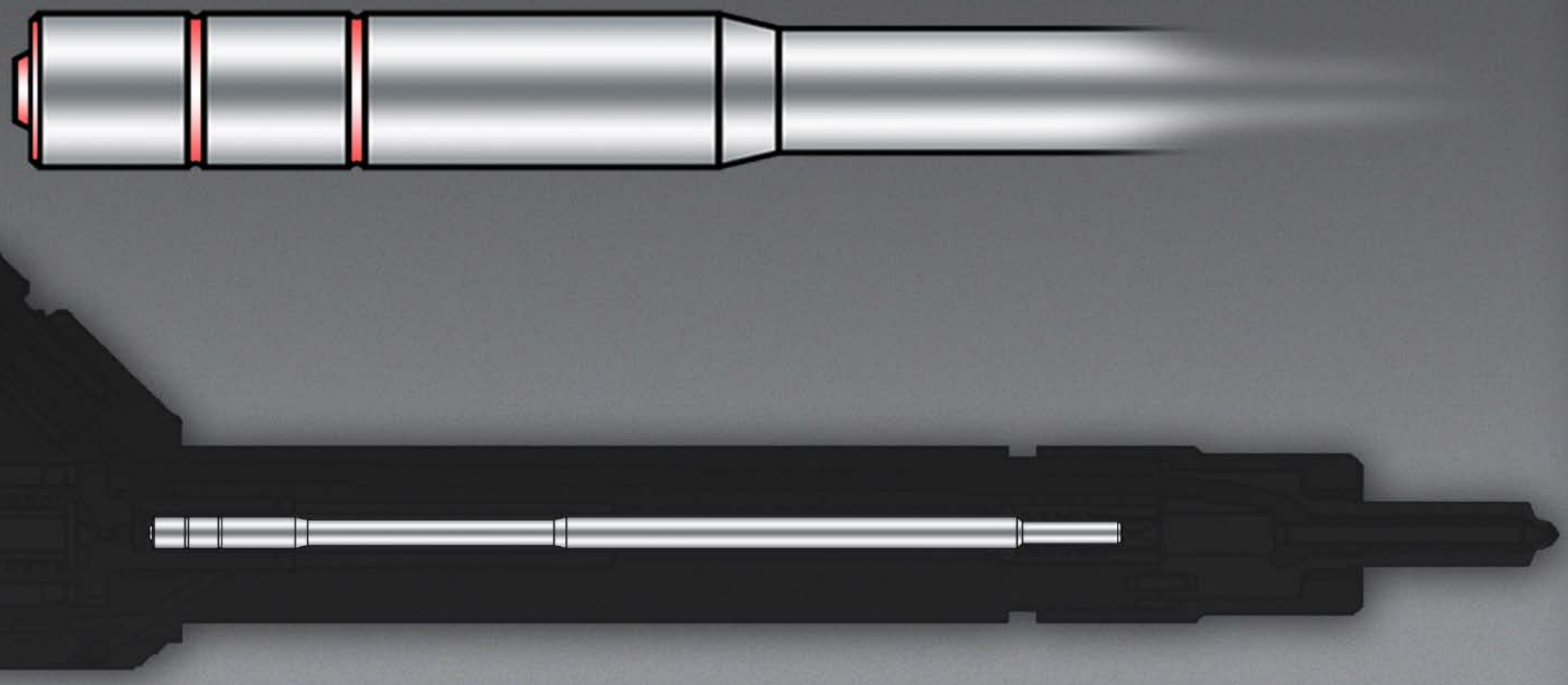

HARDINGE GRINDING GROUP
KELLENBERGER J&S HAUSER TSCHUDIN USACH VOUMARD
Marcel Kohler

Automotive Fuel Injection Control Shaft Tschudin T25

Fuel Injection Equipment High-precision Machining Technology Summit 2016

HARDINGE GRINDING GROUP

KELLENBERGER J&S HAUSER TSCHUDIN USACH VOUMARD

Marcel Kohler

全自动配磨中心

We build alternative solution

for

Chinese market

根据中国市场需求研发制造工艺

高压共轨喷油器零部件

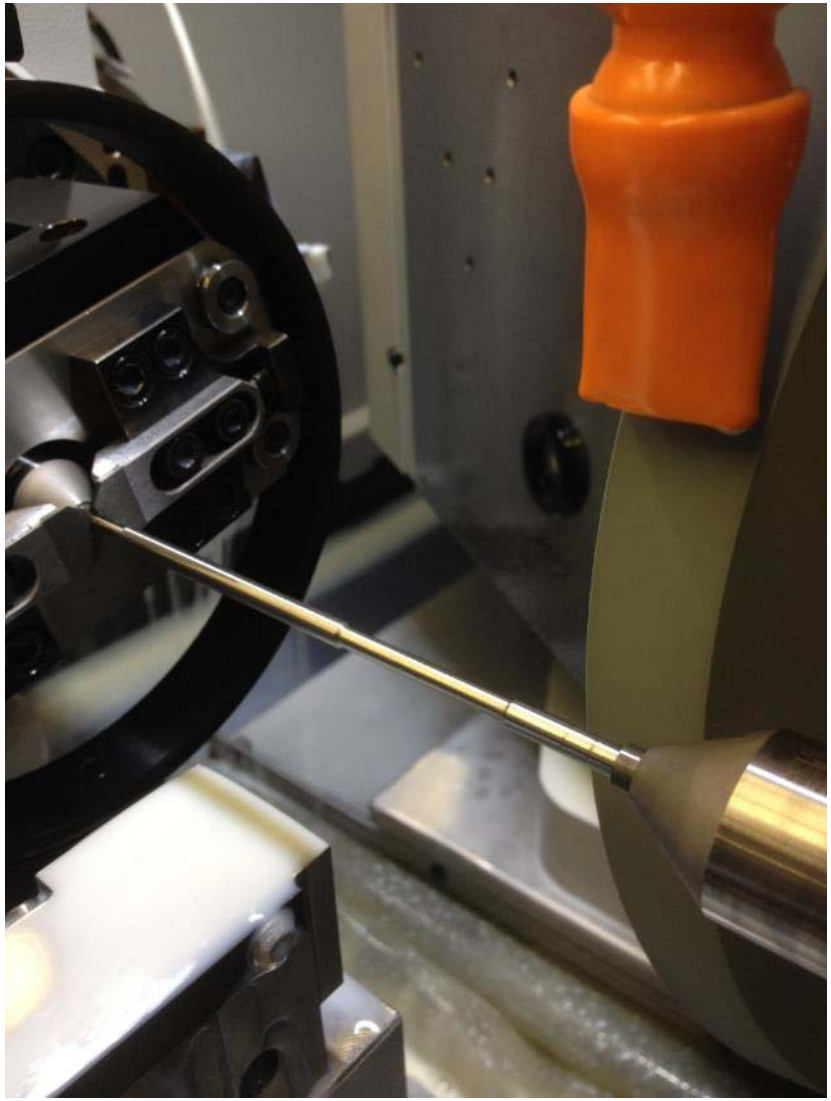

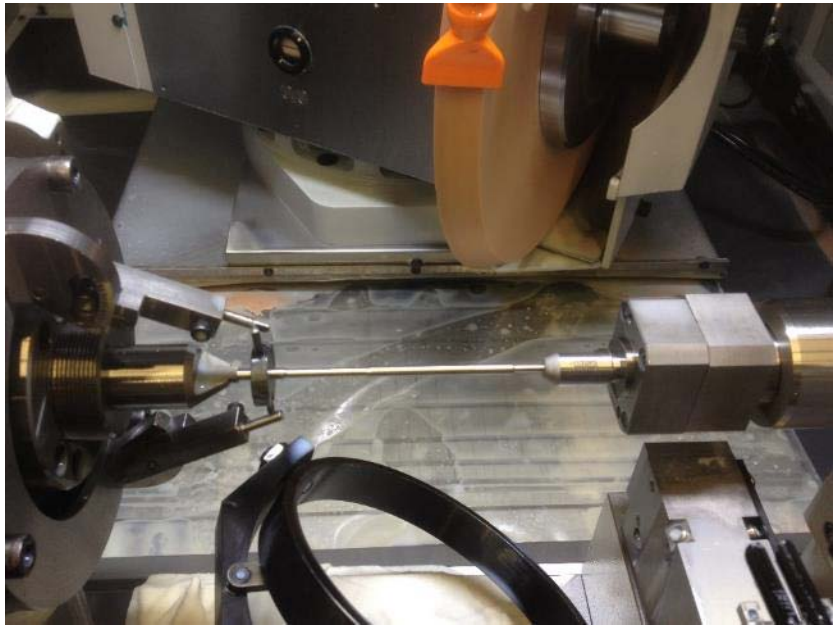

高压共轨喷油器零部件

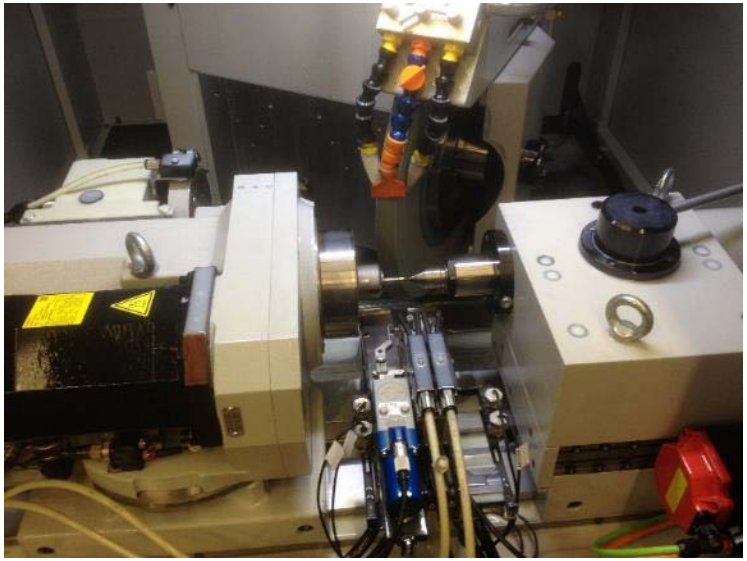

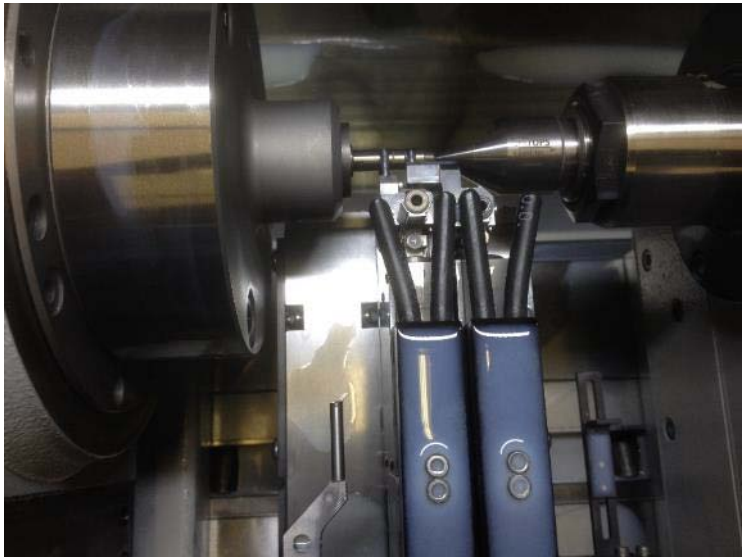

电控单体泵零件

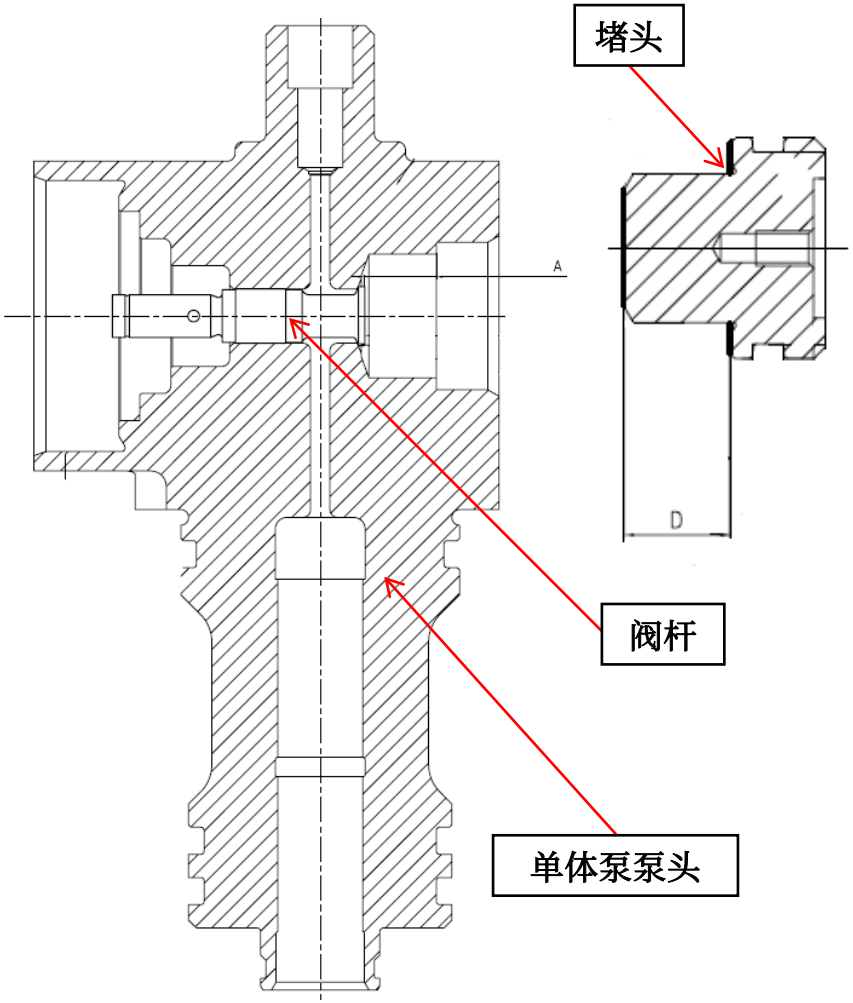

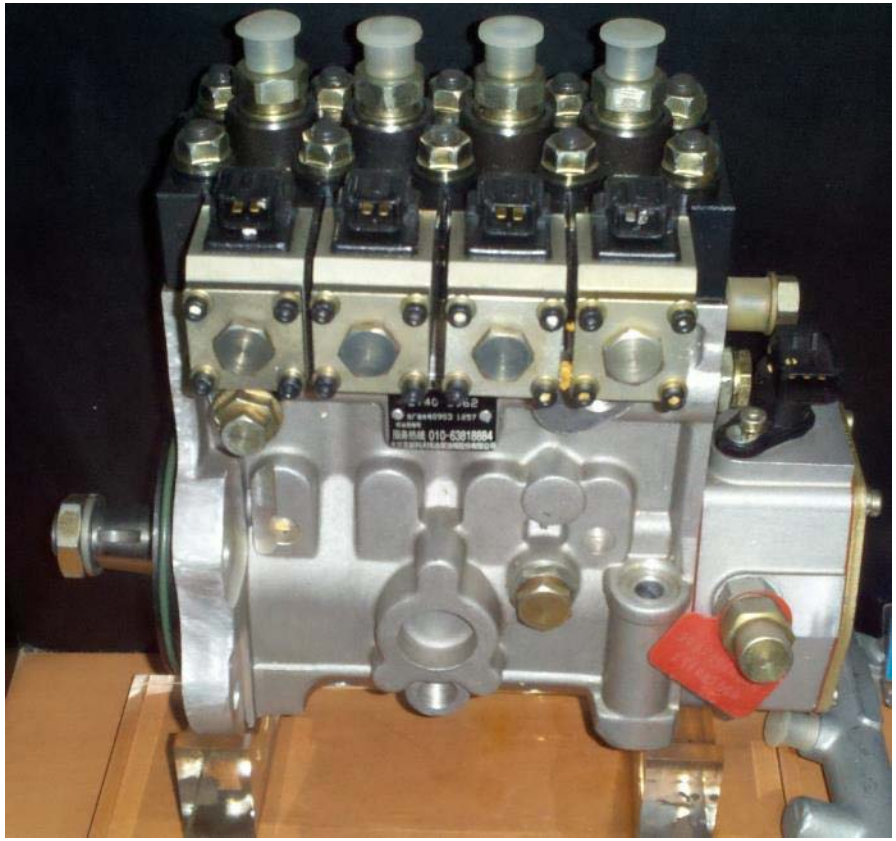

单体泵中孔座面

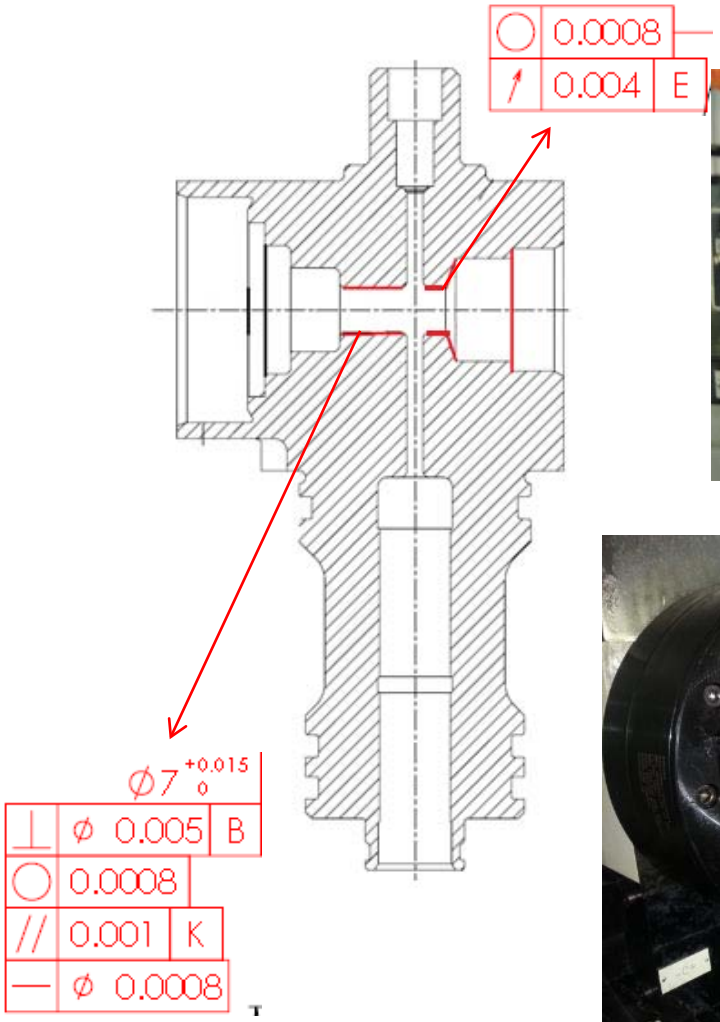

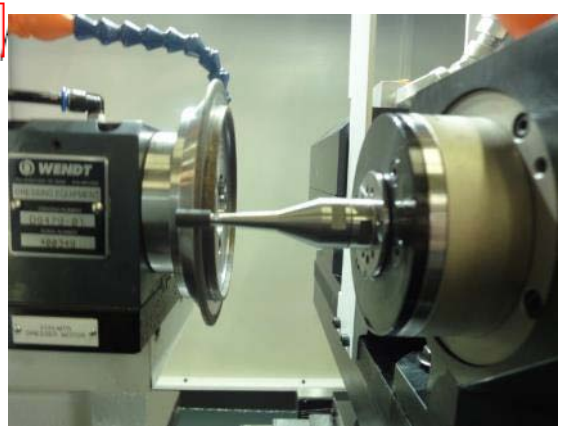

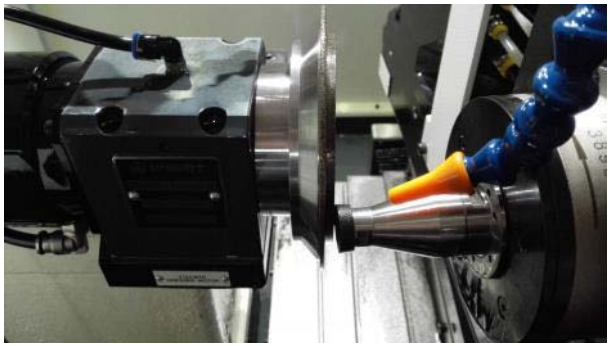

单体泵阀杆

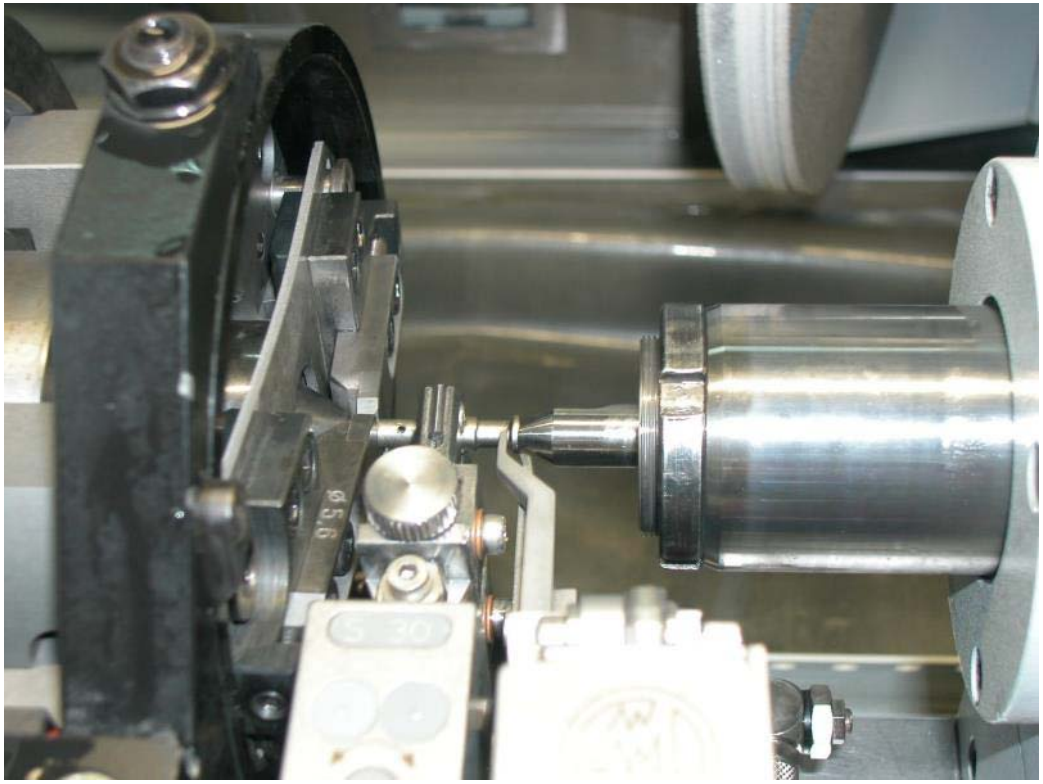

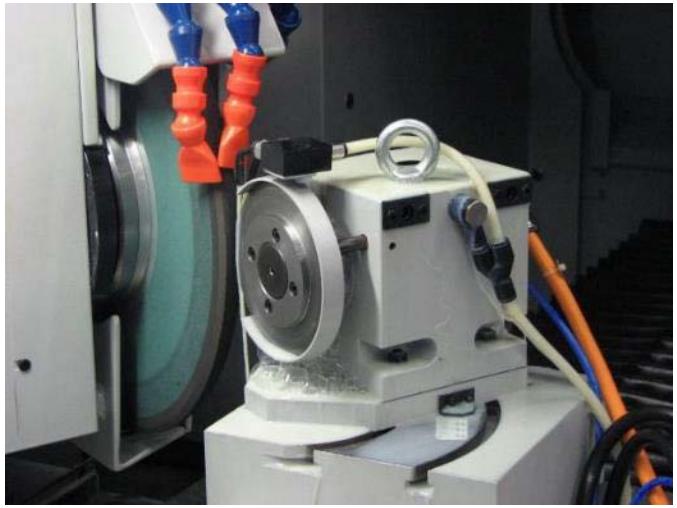

间隙配磨公差＜0.001mm，阀杆圆度≤0.0005mm
Cycle time below 30 s

单体泵堵头配磨

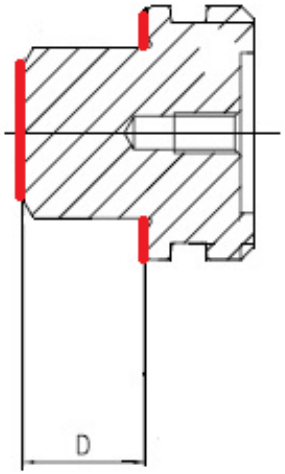

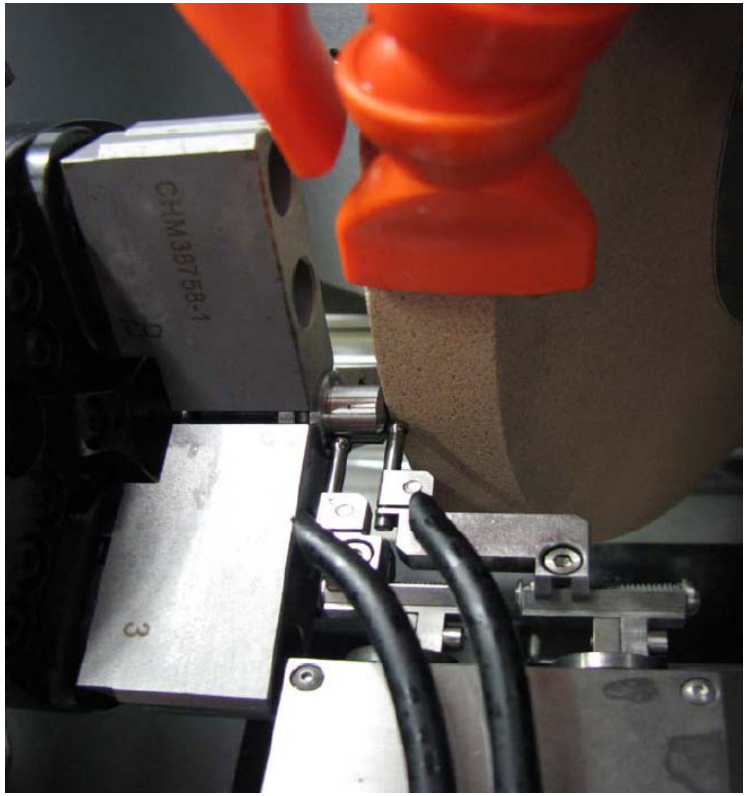

配磨间隙A-D公差0.005mm，平行度0.003mm，加工节拍22秒

柱塞

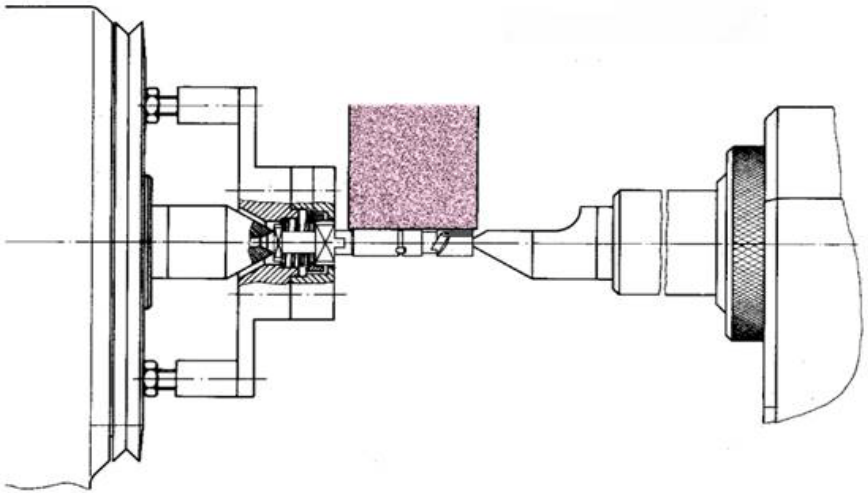

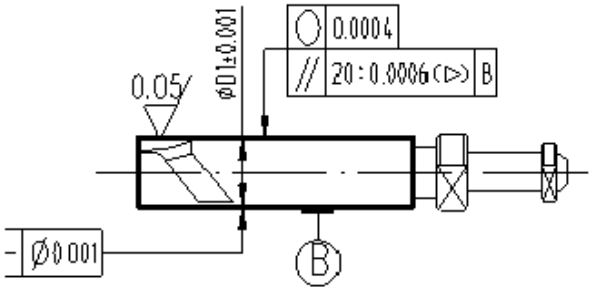

Process sketch

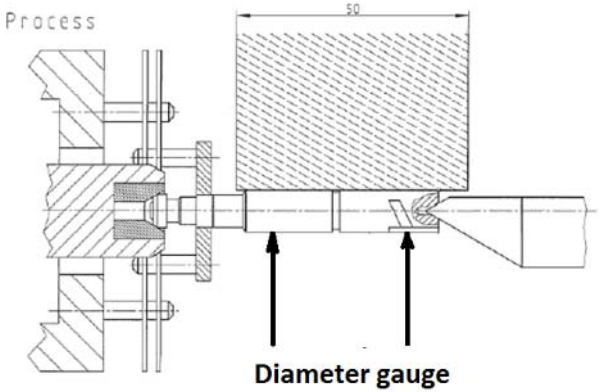

VE 泵柱塞

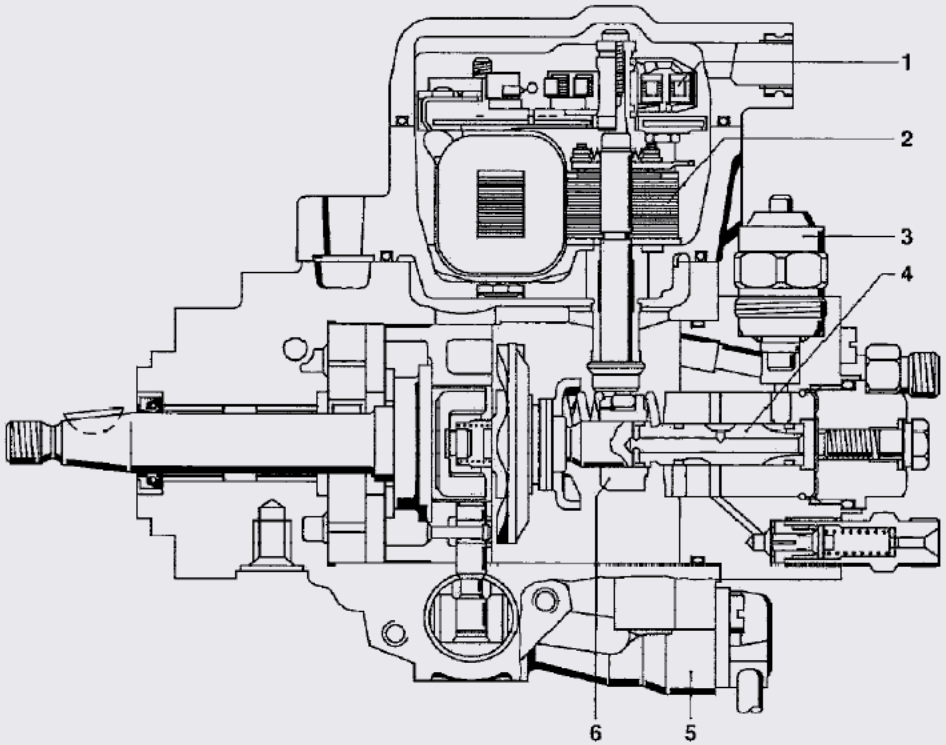

1 - 控制套的行程传感器；2 - 喷油量的电磁调节机构；3 - 断油电磁阀；4 - 分配柱塞；5 - 提前器的电磁阀；6 - 控制套

图4 VE-EDC型电控轴向柱塞式分配泵

趋势控制间隙配磨：
间隙公差＜0.001mm，柱塞圆度≤0.0005mm

船用柴油机燃油喷射零件

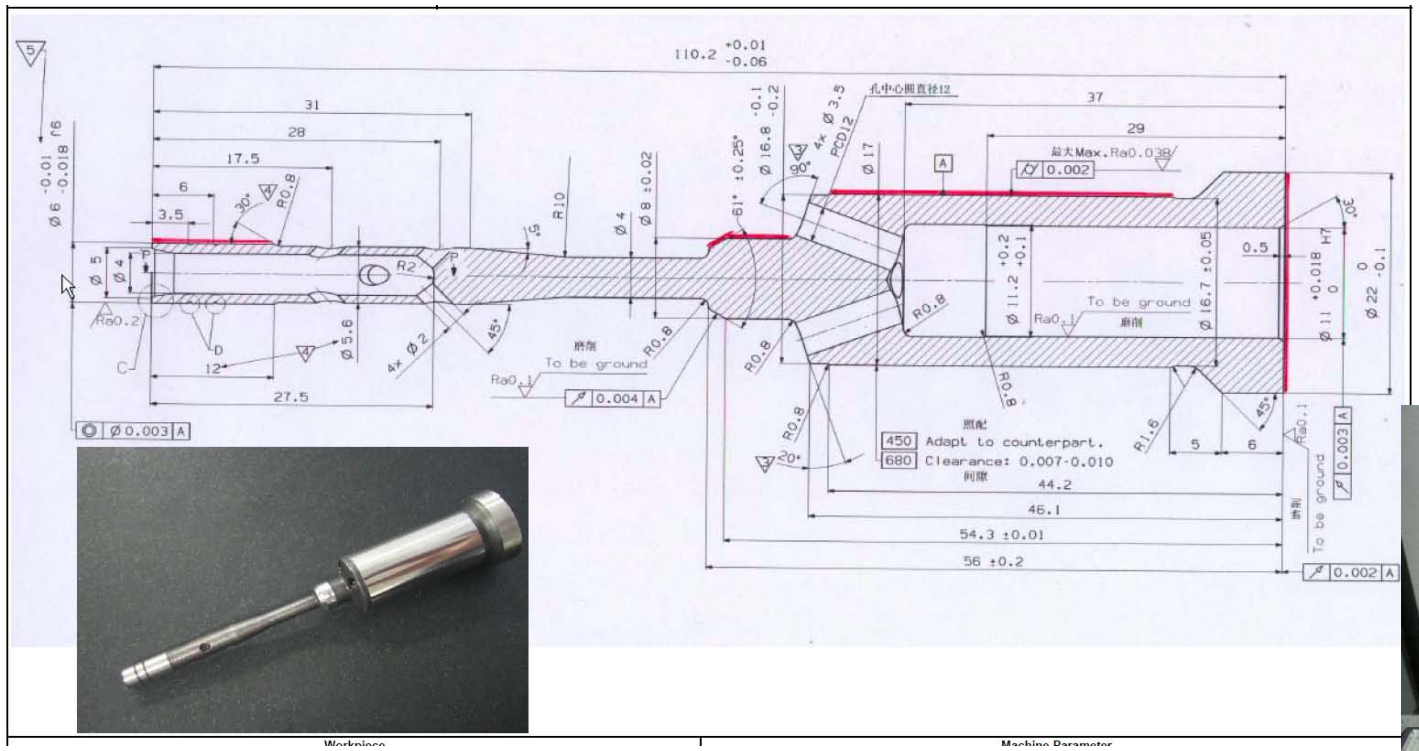

谢谢！

Dawson Wang王晓晖

亚洲区磨床产品市场&行业开发高级总监
Hardinge Asia Limited
Add: 1388 East Kangqiao Road, Pudong, Shanghai
Tel: +86 21 3810 8686 ex 8616
Mobile: +86 1360 1675 383
E-mail: dawson.wang@hardinge.com