生物制药与无菌制剂的不锈钢工艺模块设计和测试要点

王伟
上海净泽洁净设备有限公司

2018.09

工艺设计

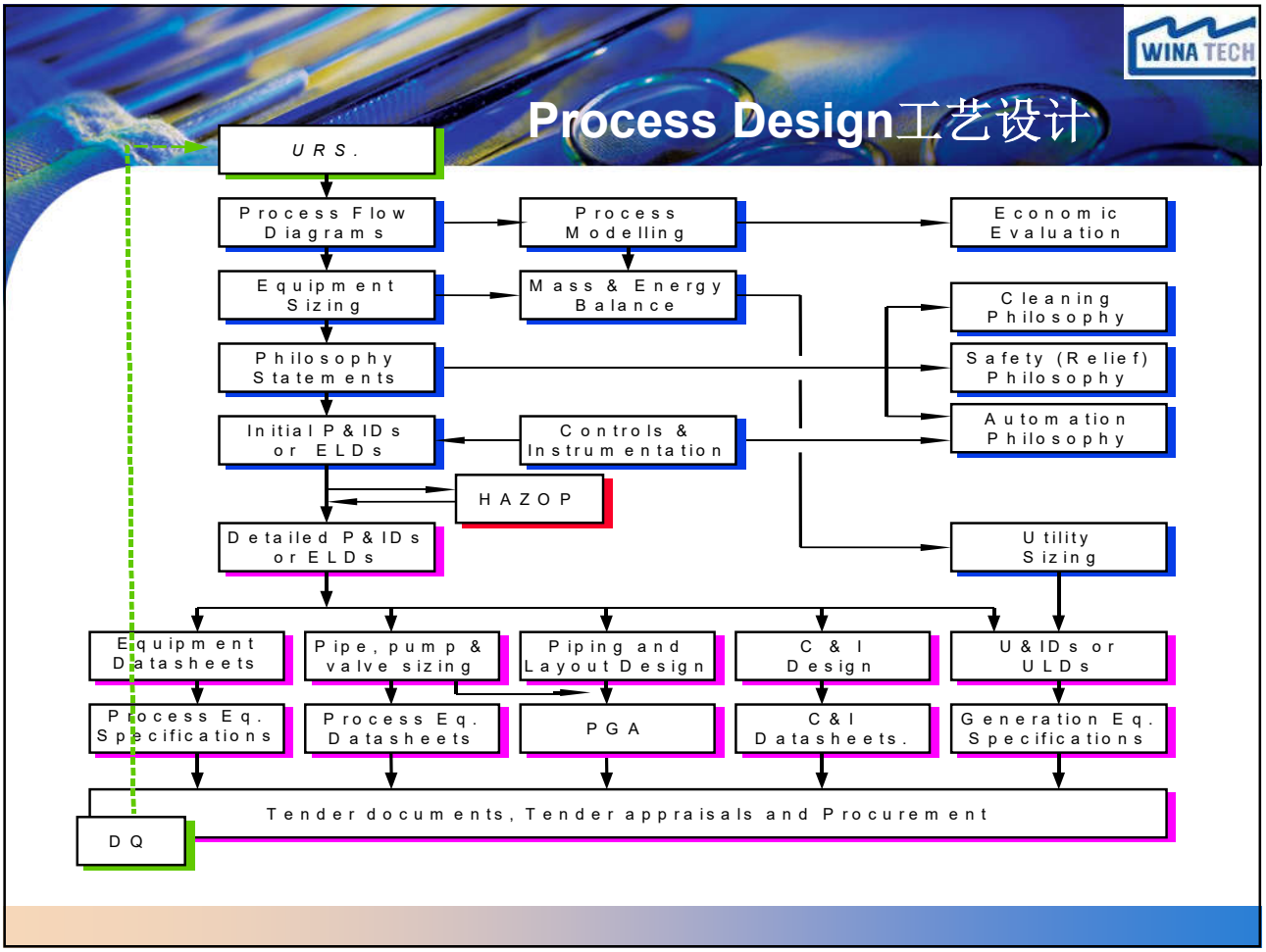
WINA TECH
Process Design工艺设计
U R S .
Process Flow Diagrams
Process Modelling
Economic Evaluation
Equipment Sizing
Mass & Energy Balance
Cleaning Philosophy
Philosophy Statements
Safety (Relief) Philosophy
Initial P&IDs or ELDs
Controls & Instrumentation
Automation Philosophy
HAZOP
Detailed P&IDs or ELDs
Utility Sizing
Equipment Datasheets
Pipe, pump & valve sizing
Piping and Layout Design
C & I Design
U&IDs or ULDs
Process Eq. Specifications
Process Eq. Datasheets
PGA
C&I Datasheets.
Generation Eq. Specifications
Tender documents, Tender appraisals and Procurement
DQ

配液系统基本要求

WINA TECH

Compound Function
Water supply
Material dosing
Vent/Vacuum/Sparge
Mix
Heat/Cooling
Product transfer
Filtration
Sample
Storage

5

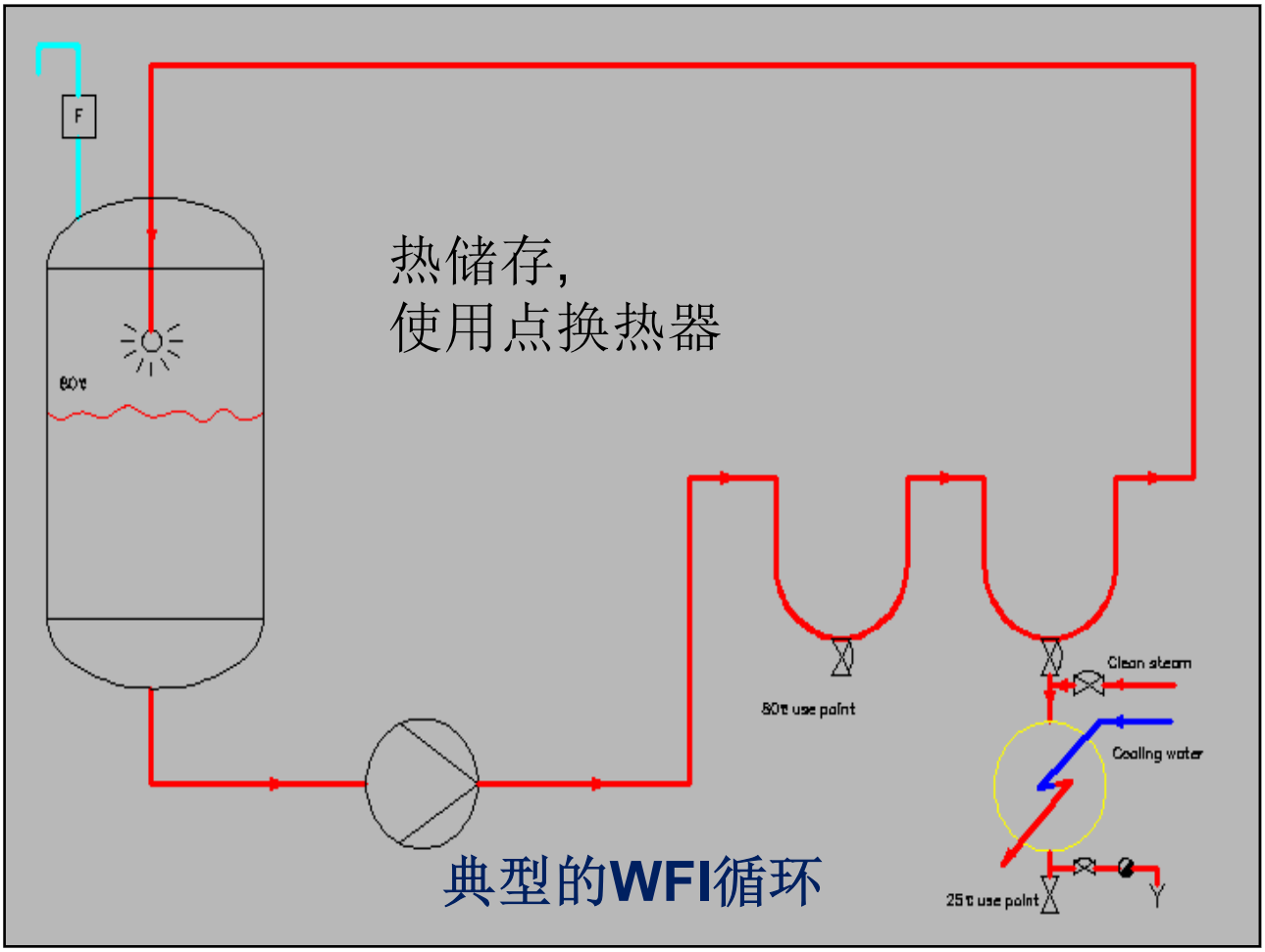
F
80°C
热储存,
使用点换热器
80°C use point
Clean steam
Cooling water
25°C use point
典型的WFI循环

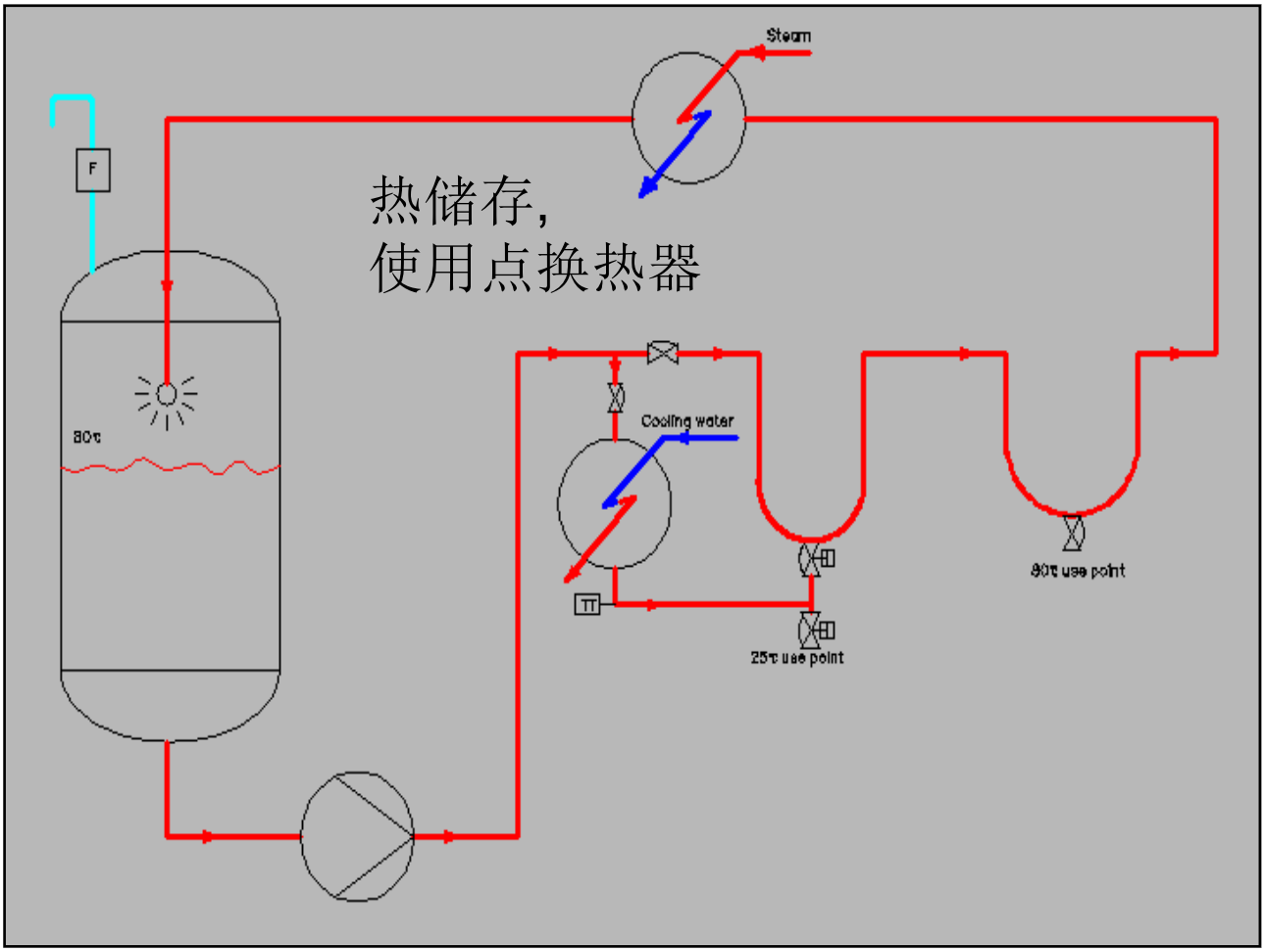
Steam
F
热储存,
使用点换热器
80℃
Cooling water
TI
25℃ use point
80℃ use point

WFI System注射用水系统

多路冷点回换热器的原因及优点

原因:

由于冷点比较多，如果每次用水结束后直接回主管道的话，会造成主管道的温度下降，这点在GMP的角度上会有很大问题，因为大面积的冷水会造成很大风险

优点：

把这些冷水直接回到末端换热器的前端，这样的话 这些冷水直接通过换热器进行加热，从而使风险降到最低

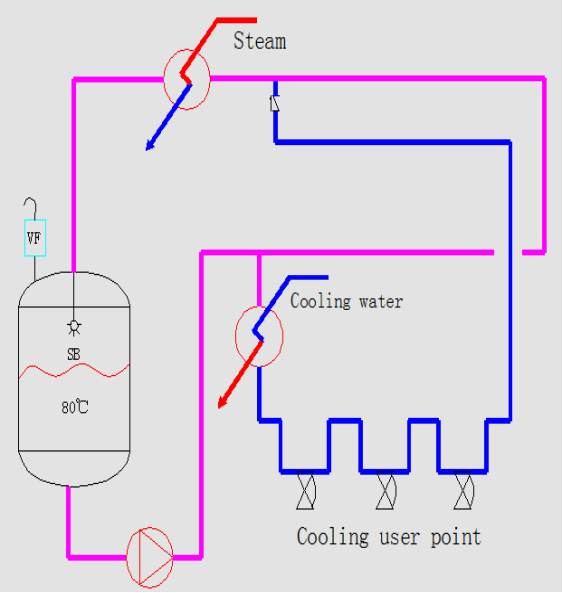

用点连接1

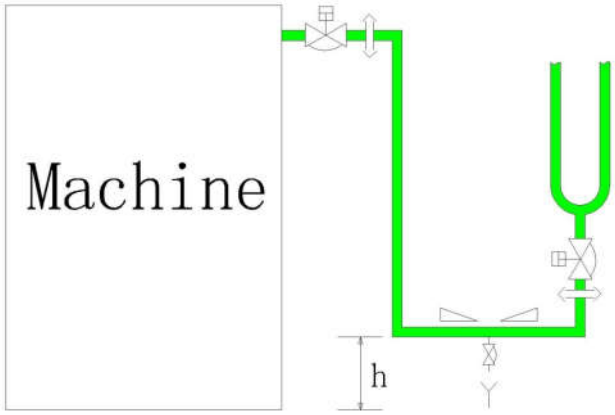

1

3

2

用点连接2

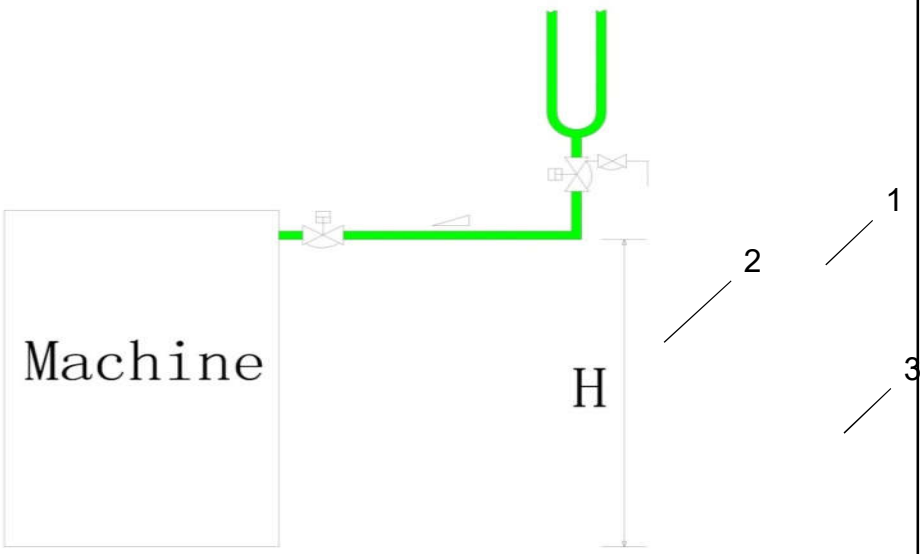

用点连接3

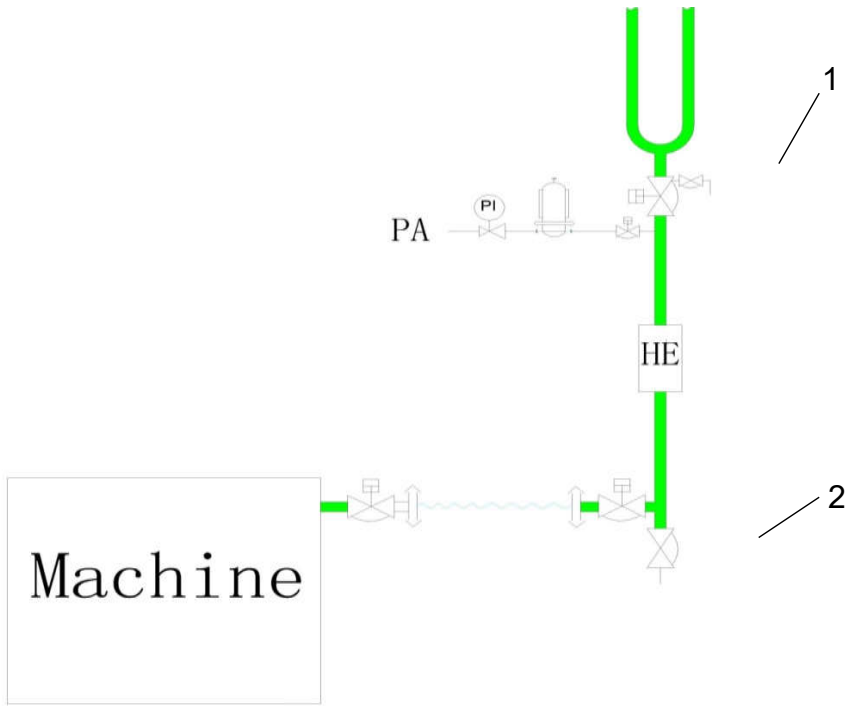

Loading cell/Balance

Accuracy 0.1%
Economy
Replace level meter

Hose connection
Agitator running impact
Installation difficulty
Calibration online

Control method

- Manual valve
- Control valve
- On-off auto valve
- On-off auto valve with small by-pass valve

Material dosing

Manual dosing into man hole
Hopper gravity
Vacuum dosing system
Peristaltic pump
Powder dispersion

Hopper gravity (Small)

Lift column(big)

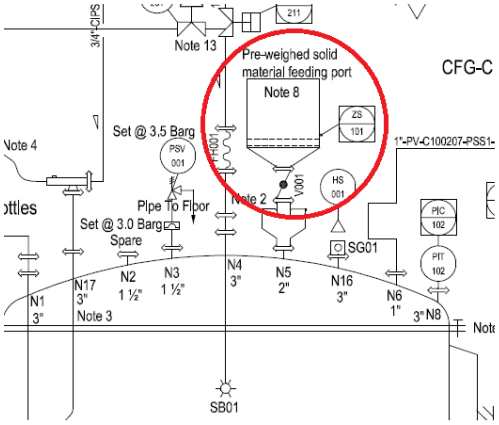

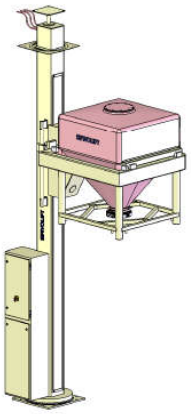

Powder dispersion

Recirculation

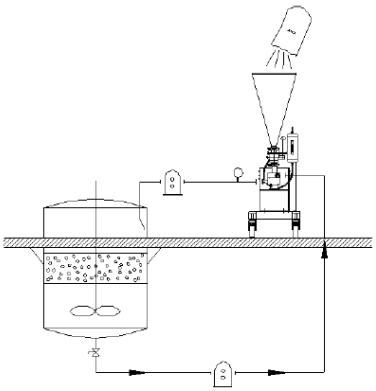

Cooling/Heating

Heating and cooling by jacket
Cooling by jacket
TCM

Heat/Cooling

Both hot and cool media

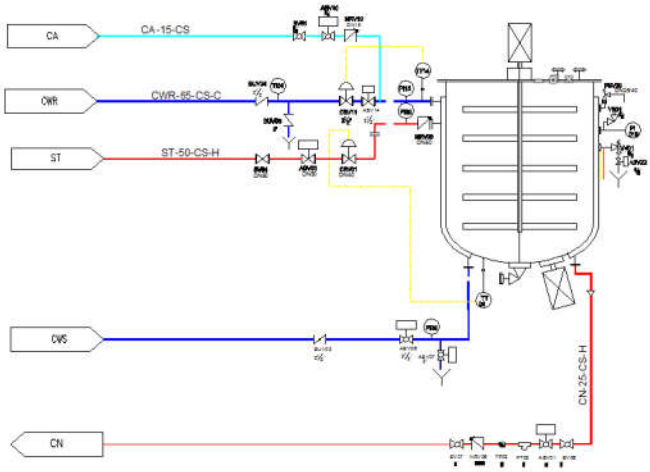

Product transfer

Sterile PA/N2 transfer
Lobe pump
Peristaltic pump
Centrifugal pump
Quattroflow diaphragm pump

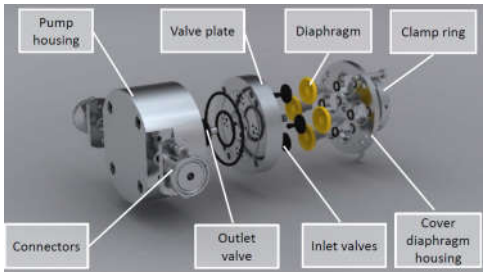
Pump housing
Valve plate
Diaphragm
Clamp ring
Connectors
Outlet valve
Inlet valves
Cover diaphragm housing

Filtration

Single filter
Redundant filter
Liquid filter integrity test in-line after SIP and product
Filter layout

WINA TECH

Single filter

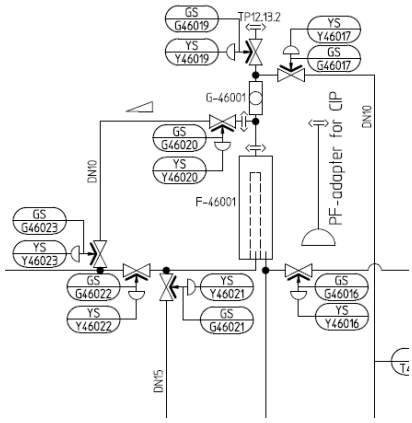

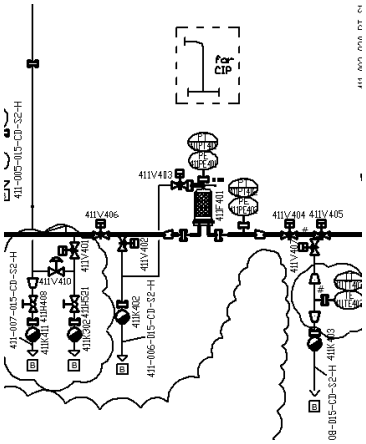

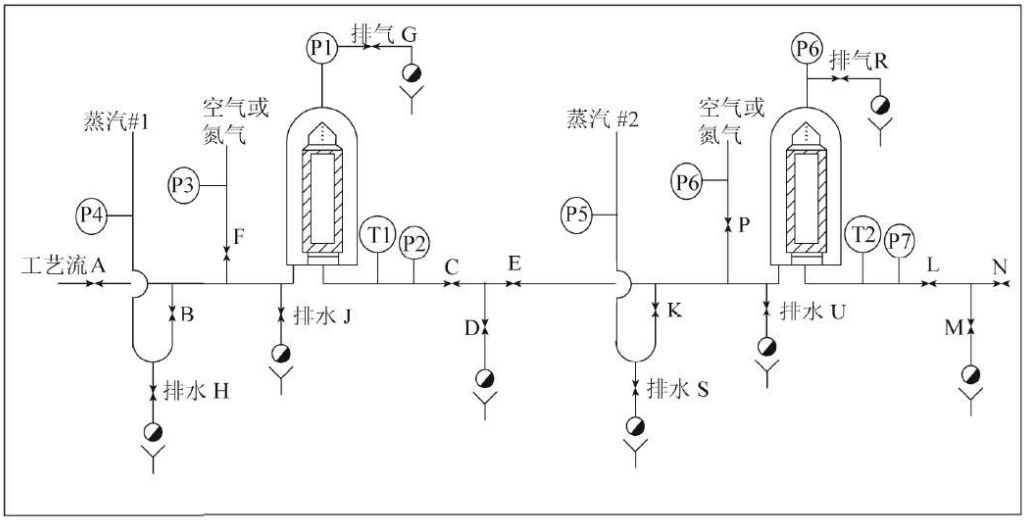
排气 G
P1
蒸汽#1
空气或
氮气
P3
P4
F
工艺流 A
B
排水 J
排水 H
T1
P2
C
E
D
蒸汽 #2
空气或
氮气
P6
P5
P
K
排水 S
排水 U
P6
排气R
T2
P7
L
N
M

Storage

Sterile Sample
Mixing temperature control
N2 protection

Sampling

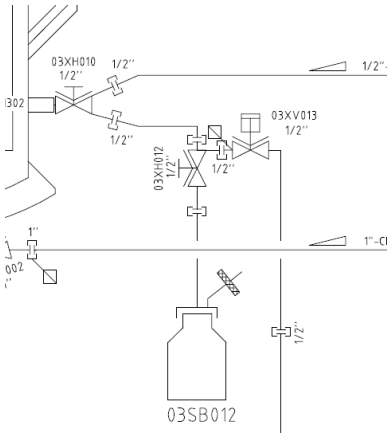

WINA TECH

CIP

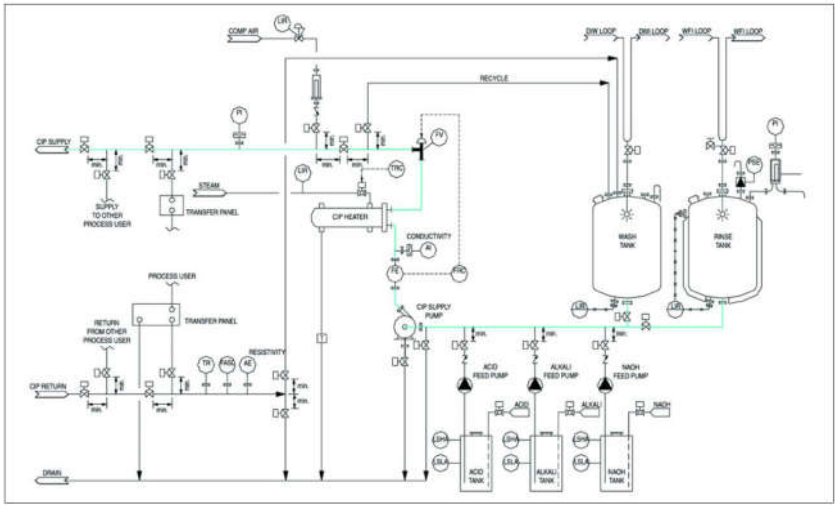

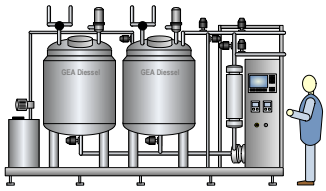

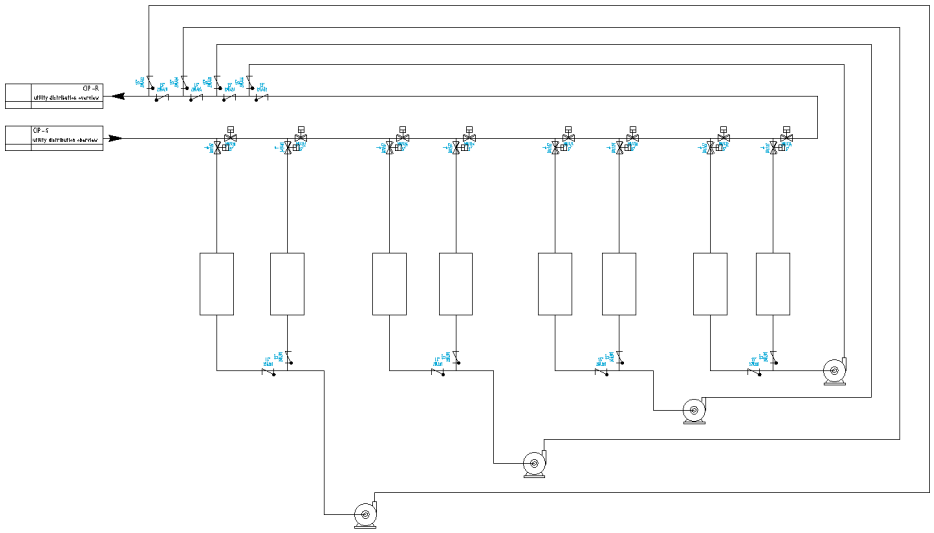
CP -R
utility distribution chamber
CP -S
utility distribution chamber

Spray Ball

Type	Advantages	Disadvantages	Illustration
Low pressure	Low cost	High flowrate	
	Wide range available	High effluent and water load	
	Rapid heat input	No mechanical effect	
	No moving parts	Relies entirely on chemical cleaning	
	Low maintenance	Limited spray diameter	
	Copes well with internal obstructions	High pressures vaporise sprays	
	Flowrate integrates well with line cleaning	Need multiple spray heads for larger vessels	
	Easy to confirm correct operation automatically	Need larger CIP pipework and scavenge pumps	

High pressure	Low flowrate	High cost	
	Lowest effluent load	Lower heat input rate	
	Removes heavy soil by high-pressure jets	Moving parts	
	Lowest CIP pipework diameters	Higher maintenance	
	Smaller scavenge pumps	Can jam	
	Excellent spray diameter range	Needs flow and motion instrumentation to automatically confirm operation	
	High-pressure mechanical cleaning effect	Internal obstructions break up jets	
	Single head can clean very large vessel	Longer cleaning sequence	

Medium pressure	Medium cost	Need multiple spray heads for larger vessels	
	Wide range available	Moving parts	
	Moderate heat input	Higher maintenance, and can jam	
	Medium flowrate	Need flow and motion instrumentation to automatically confirm operation	
	Lower effluent load	Internal obstructions break up jets	
	Lower CIP pipework diameters		
	Smaller scavenge pumps		
	Good spray diameter range		
	Some mechanical cleaning effect		

TANKO® RT由旋转洗球TANKO® RPB-E（A），
液压管（B）及气动驱动装置（C）组成一体

CIP

Bio-tech CIP Step:

① Drain
② Leakage test
③ PW Pre-washing (cold)
④ Detergent(1~3% concentration) heating
⑤ Detergent washing and recirculation
⑥ Air blow to reclaim detergent
⑦ PW rinse
⑧ WFI final rinse
⑨ Air blow to dry

CIP flow rate and pressure variation control within 15%

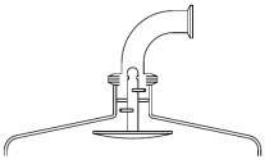

FIGURE 9 Filter housings absent nozzles in the dome may be cleaned with a simple disc distributor. This device may be left in place for all use of the filter and will distribute flush, wash, and rinse solutions to the housing dome and sidewall at any range of flow and pressure required to meet other CIP design criteria.

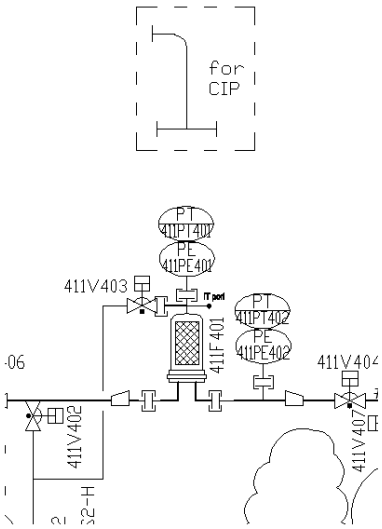

SIP

Step:

①Drain
②Leakage test
③Vacuum
④Clean steam heat up
⑤Sterilization
⑥Air blow cooling down
⑦Cold medium cooling down
⑧Pressurized

Typical SIP drip **tube** installation detail

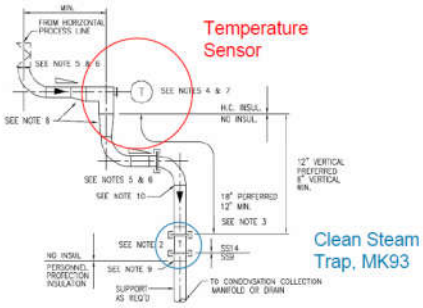

Equipment Selection

设备选型

Equipment Spec设备选型

罐底阀 Tank Bottom Valve

- 材质：316L
- 标准：ASME BPE，特殊阀体整块钢加工成，EP Ra<0.4um
- 膜片：双层膜片EPDM/PTFE
- 优点：焊在容器的最底部，从而可以达到最佳的排空、清洗、消毒的效果。阀的密封堰已经尽可能靠近罐底壁，从而达到零死角效果。

  阀体由整钢加工而成（无焊接的结构）

Equipment Spec设备选型

磁力搅拌器 Magnetic Mixer

- 接触物料材质：316L
- 表面处理：EP Ra<0.4um
- 其他：碳化硅轴侧，不能干转。
  设计转速50-400rpm，叶轮锻造，同轴异　步电机。含测数器，防护等级IP55

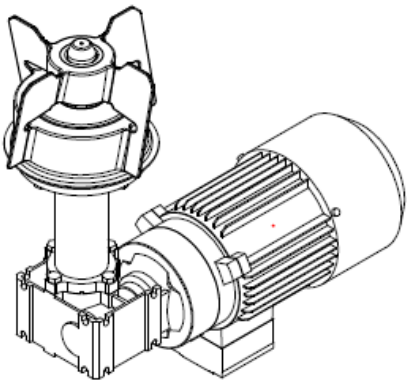

Equipment Spec设备选型

罐体视镜Sight Glass

- 型号：MV80+SWI+USL01
- 材质：SS316L
- 观察孔：soda lime glass
- 操作压力：6bar
- 温度：最高280℃

MV/ME系列，可满足光源和观察口的用途

MV+USL01系列

Equipment Spec设备选型

回流泵 pump

- 物料接触部分：SS316L
- 抛光：MP Ra 0.6um
- 密封：单端机械密封，SiC/SiC/EPDM
  耐温130℃

Equipment Spec设备选型

管壳式换热器

- 密封圈：采用符合 FDA 标准的 O 形密封圈.
- 设计形式：管层设计为双层
  壳层走蒸汽
  物料走管层

Equipment Spec设备选型

疏水器

型号：BTM7洁净型热静力疏水器，卡箍连接
安装位置：CIP灭菌管路

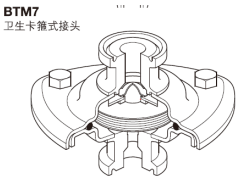

型号：MST21H热静力疏水器，丝扣连接
安装位置：SIP排放

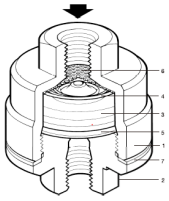

型号：FT14浮球式疏水器，法兰连接
安装位置：PS冷凝水排水管路

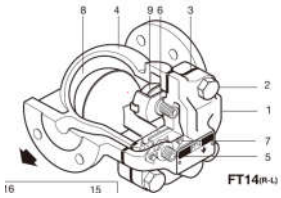

Equipment Spec设备选型

仪表Instrument

CIP系统专用电导率仪表Conductivity meter

- 测量范围Range of testing：600-2000us/cm
- 输出Output：0-20mA
- 精度Precision ： ±1.0%
- 温度上限The temperature upper limit :155℃
- 连接Connection：Clamp connection卫生型卡箍连接
- 测定点Testing: 在化学添加剂混合后打出的管道上

Equipment Spec设备选型

流量计Flow meter

- 质量流量计
- 材质：316L不锈钢
- 测试范围：0-45m3/h
- 介质温度：100℃,
- 输出：4-20mA
- 精度：0.5%
- 表面抛光：MP Ra<0.4μm
- 连接方式：卫生型卡箍连接
- 安装位置：收获系统

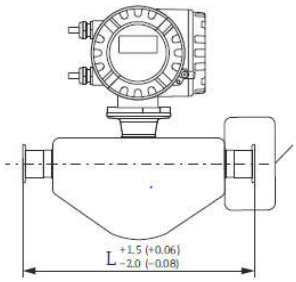

测试方案

WINA TECH

FAT

System Function Test

- ✓System Software Edition Check检查系统软件版本
- ✓Password Test密码测试
- ✓System Auto/Man/stop run系统自动 手动及停止
- ✓CIP pump running CIP泵运行
- ✓Tank level 罐子液位
- ✓CIP/SIP测试
- ✓Filter Integrity Test过滤芯完整性检测
- ✓Cooling down test 冷却测试（City Water）
- ✓Vent Filter Heat Jacket Function Test呼吸器夹套加热功能测试
- ✓System emergence stop test系统紧急停止测试
- ✓Agitation Test(VFD)搅拌器调速测试
- ✓Load Cell Test(Raw material adding test)
- ✓Flow meter Test(Transfer Test)

Test Facilities测试设施

Test Facilities Include:

测试设施包括：

- **RO Water**

  RO水
- **Plant Steam**

  工厂蒸汽
- **Clean Steam**

  洁净蒸汽
- **Clean Dry Air**

  清洁干燥空气
- **Vessel Test Bay**

  容器试验台
- **Sprayball testing**

  喷淋测试
- **Calibrated inspection equipment includes: Micrometers, Profilometers, Ferritescope, Digital Protractors, Positive Material Identification (PMI).**

  校准检测设备包括：千分尺，表面粗糙度仪，铁离子检测仪，数显角度仪，材料检测仪（PMI）。

SAT
现场验收测试

机械完成性检查 Mechanical Completion Inspection

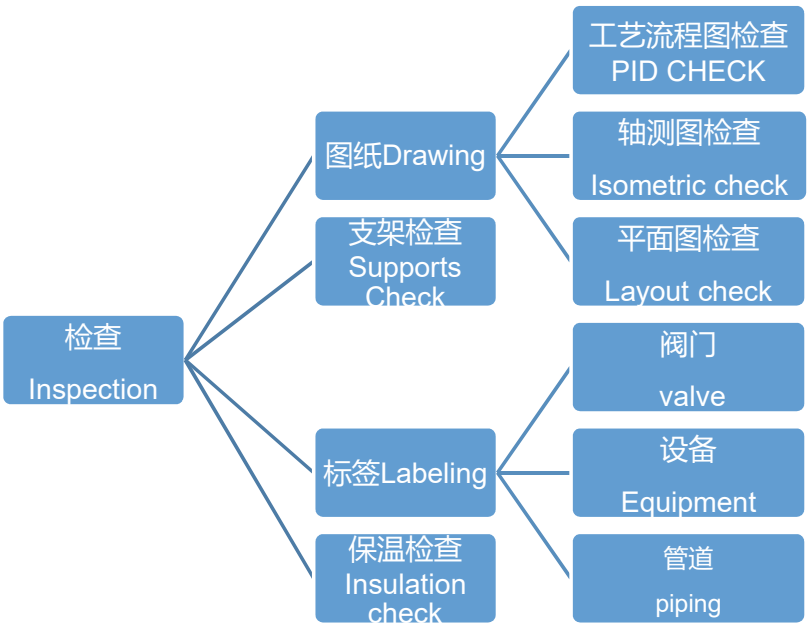

SAT
现场验收测试

Utilities Confirmation公用设施的确认

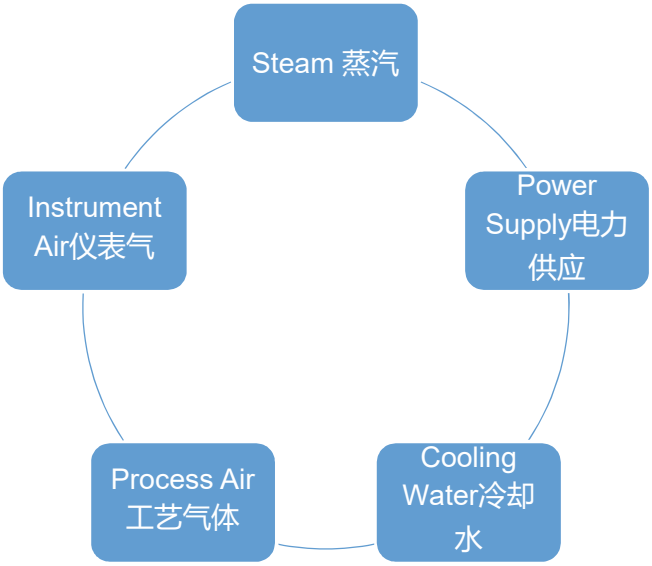

SAT
现场验收测试

Function Test系统功能测试

密码测试
泄漏测试
CIP测试
吹扫测试
灭菌测试
过滤器湿润
完整性测试
称重校验
配制测试
PH调节
搅拌测试
定容测试
物料传输测试
报警测试
Etc.

cGMP Perspectives

cGMP Perspectives

For single line

- Material
- Deadleg
- Drainability
- Welding
- Calibration
- Marking & Labeling
- Insulation
- Pickling & Passivation
- Decontamination
- Valve Angles
- Air Break
- Filter Integrity
- Etc.

For System

- Surface Finish test
- Sprayball Coverage Test
- GAMP5 & Part 11
- Minimum Flow Rate
- Wiring Test
- System Alarm
- Interlock
- P&ID Verification
- Critical Process Parameter
- Critical Quality Attributes
- Etc.

Inspection Item of GMP
施工GMP检查事项

- Welding Procedure Qualification Recordkeeping 焊接工艺评定记录保存
- Welder Qualification Recordkeeping 焊工资质记录保存
- Incoming Material Inspection 进料检验
- Welding Inspection 焊接检查
- Valve Angle inspection 阀门角度检查
- Deadleg Inspection 死角检查
- Wiring Test 接线检查
- Control Panel Inspection控制柜检查
- Pressure test 压力测试
- Flushing， Degreasing ， Pickling Passivation 冲洗 碱洗 酸洗 钝化
- Air break inspection 空气隔断检查
- Calibration instrument 仪表校验检查
- Spray Ball Coverage Test 洗球覆盖测试
- Mechanical Inspection (support /insulation /label and so on.)机械完整性检查（支架，保温，标签，挂牌 等等)

Material Inspection

Qualified Materials

Sample Installation

- Material Certificate
- Surface Finish Report
- Random Check
- 3rd Party Check

Materials Quality Control 材料质量控制

Equipment & Welder certificate
施工设备及焊工资质

Imported endoscope
进口手持式内窥镜3pcs

spectrum analyzer
手持式光谱分析仪1pcs

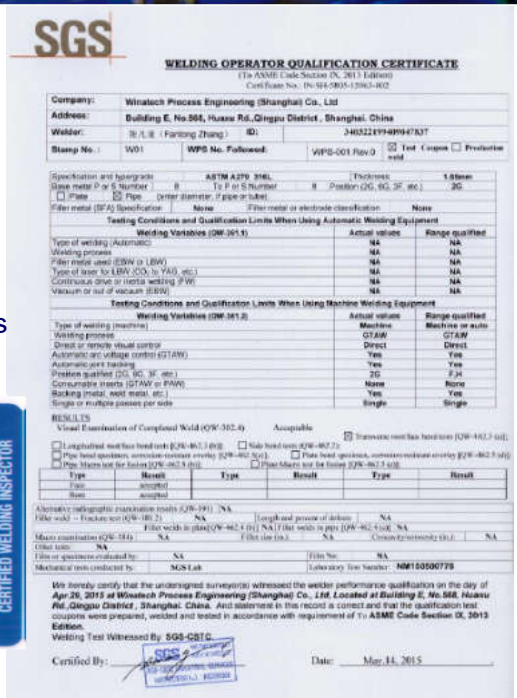

SGS

WELDING OPERATOR QUALIFICATION CERTIFICATE

(To ASME Code Section IX, 2013 Edition)

Certificate No.: IN-SH-5805-15063-002

Company:	Winatech Process Engineering (Shanghai) Co., Ltd
Address:	Building E, No.568, Huaxu Rd.,Qingpu District, Shanghai, China
Welder:	张方雄（Fanxiong Zhang） ID: 340322199409947337
Stamp No.:	W01 WPS No. Followed: WPS-001 Rev.0 ☒ Test Coupon ☐ Production weld

Specification and type/grade	ASTM A270 316L			Thickness	1.0mm
Base metal P or S Number	8	To P or S Number	8	Position (2G, 6G, 3F, etc.)	2G
☐ Plate ☒ Pipe (inner diameter, if pipe or tube)					
Filler metal (SFA) Specification	None	Filler metal or electrode classification		None	

Testing Conditions and Qualification Limits When Using Automatic Welding Equipment

Welding Variables (QW-361.1)	Actual values	Range qualified
Type of welding (Automatic)	NA	NA
Welding process	NA	NA
Filler metal used (EBW or LBW)	NA	NA
Type of laser for LBW (CO2 to YAG, etc.)	NA	NA
Continuous drive or inertia welding (FW)	NA	NA
Vacuum or out of vacuum (EBW)	NA	NA

Testing Conditions and Qualification Limits When Using Machine Welding Equipment

Welding Variables (QW-361.2)	Actual values	Range qualified
Type of welding (machine)	Machine	Machine or auto
Welding process	GTAW	GTAW
Direct or remote visual control	Direct	Direct
Automatic arc voltage control (GTAW)	Yes	Yes
Automatic joint tracking	Yes	Yes
Position qualified (2G, 6G, 3F, etc.)	2G	F,H
Consumable inserts (GTAW or PAW)	None	None
Backing (metal, weld metal, etc.)	Yes	Yes
Single or multiple passes per side	Single	Single

RESULTS

Visual Examination of Completed Weld (QW-302.4) Acceptable

☐ Longitudinal root face bend tests (QW-462.3 (b)) ☐ Side bend tests (QW-462.2);

☐ Pipe bend specimens, corrosion-resistant overlay (QW-462.5(c)); ☐ Plate bend specimens, corrosion-resistant overlay (QW-462.5 (d))

☐ Pipe Macro test for fusion (QW-462.5 (b)) ☐ Plate Macro test for fusion (QW-462.5 (c))

Type	Result	Type	Result	Type	Result
Face	Accepted				
Root	Accepted				

Alternative radiographic examination results (QW-191) NA

Fillet weld – Fracture test (QW-180.2) NA Longitudinal groove of defects NA

Fillet welds in plate (QW-462.4 (b)) NA Fillet welds in pipe (QW-462.4 (c)) NA

Macro examination (QW-184) NA Fillet size (in.) NA Concave/convexity (in.) NA

Other tests NA

Film or specimens evaluated by: NA Film No. NA

Mechanical tests conducted by: SGS Lab Laboratory Test Number: NM150500779

We hereby certify that the undersigned surveyor(s) witnessed the welder performance qualification on the day of Apr.26, 2015 at Winatech Process Engineering (Shanghai) Co., Ltd. Located at Building E, No.568, Huaxu Rd.,Qingpu District, Shanghai, China. And statement in this record is correct and that the qualification test coupons were prepared, welded and tested in accordance with requirement of To ASME Code Section IX, 2013 Edition.

Welding Test Witnessed By: SGS-CSTC

Certified By: Date: May 14, 2015

Imported Automatic welder
进口自动焊机

AWS
American Welding Society
CWI
Weijun Jiang
Has complied with the requirements of AWS QC1, Standard for AWS Certification of Welding Inspectors.
16112681
Exp. 1 Nov 2019
With Eye Correction
AWS President
AWS Certification Chair
CERTIFIED WELDING INSPECTOR

AWS certificate
AWS 证书

SGS certificated welder
国际第三方认证焊工

Welding Inspection

Qualified Welding

3rd Party Inspection

- WPS & Welder Qualificarion
- Purging Gas Quality
- Boroescope
- Welding Log &Map

Welding Quality Control 焊接质量控制

焊接前确认及焊接

焊接工艺评定（WPS）确认

↓

焊工资质，焊工现场考核，编号及业主确认

↓

焊样拉伸试验（第三方）

↓

预制车间环境控制

↓

焊接

↓

自检及第三方内窥镜检测

↓

每焊20道焊缝后，进行焊样测试

Welding Quality Control 焊接质量控制

文件记录

- 焊点图及焊点编号
- 每日焊样记录
- 每日焊接记录
- 内窥镜记录
- 第三方抽检记录

Welding Quality Control
焊接质量控制

预制配管及准备

The Approved Isometric Drawing被批准的轴测图

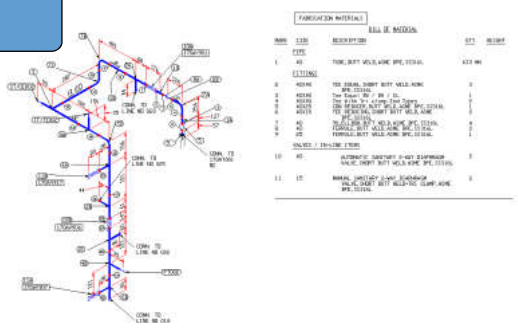

Pipe cutting and facing

管道切割及切口平口

High purity Ar and PTFE pipe
合资高纯氩气及PTFE焊接气管

Spot Welding焊接管对口及三点式点焊

Welding Quality Control
焊接质量控制

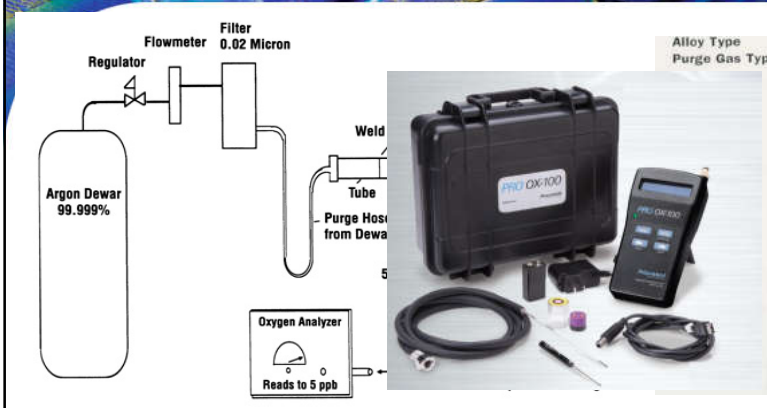

Oxygen content test machine
含氧量测试设备

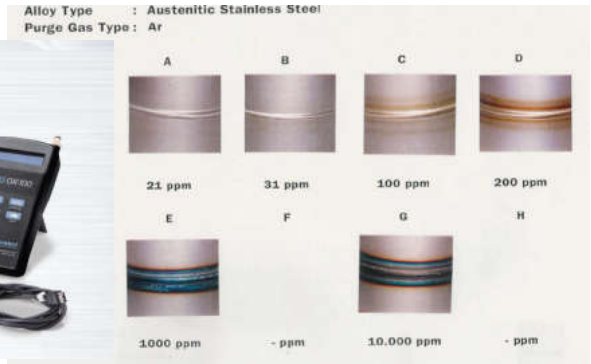

Weld Oxidation Color
焊缝氧化颜色

Boroscope ratio在焊缝检查中，内窥镜检查比例:

Module模块部分 检查比例为100%

Site现场部分 Pre-fabricate 100%预制检查比例为100%，site piping 30-50%现场管道安装检查比例为30~50%

WINA TECH

Pickling & Passivation
酸洗钝化

Standard Material标准材料：

波洱Deconex CIP Power-x 浓缩高效碱性清洗液

波洱Deconex CIP Protect　浓缩液体钝化清洗液

Standard Procedure标准清洗流程：

Refer to the next page请见下页

CERTIFICATE OF GMP COMPLIANCE

We certify herewith

that the company **Borer Chemie AG** with its site of **Gewerbestrasse 13, 4528 Zuchwil, Switzerland**, has been duly authorized to manufacture and distribute medicinal products, the manufacturing licence excluding sterile products and including following dosage forms:

- liquid dosage forms (restricted to disinfectants)

that the finished medicinal products put on the market in Switzerland by the company are subject to appraisal and authorisation by our agency;

that the company is keeping the required level for good practices in the manufacture of pharmaceutical products and active pharmaceutical ingredients according to the Swiss regulations in force. These regulations are in accordance with the requirements for good practices in the manufacture and quality control of the Pharmaceutical Inspection Convention /Co-operation Scheme (PIC/S) and the Directives of the European Commission;

that the manufacturing plant of the company is subject to official periodic inspections; the last regular inspection was conducted on **November 16-17, 2010**;

that the requirements regarding manufacture and quality control for pharmaceutical products and active pharmaceutical ingredients for export are identical to those applicable to products sold in Switzerland.

Berne, Januar 12, 2011
No. 11-051

Swissmedic, Swiss Agency for Therapeutic Products

Dr. Georges Messguer

Pickling & Passivation Standard Procedure
酸洗钝化标准清洗流程

No. 序号	Steps 操作步骤	Media 介质参数	Temperature 温度	Retention time 保持时间
1	Pre-wash预洗	Use Drinking water to rinse 饮用水冲洗	At room temperature室温	1-2min
2	Step one清洗第一步： To removal the organism 去除油脂等有机物	2%，CIP Power X solution溶液	60-70 ℃	Re-circulation循环15-30min
3	Step one 漂洗第一步	Use PW to rinse 纯化水冲洗	At room temperature室温	1-2min
4	Step two 漂洗第二步	Use PW to rinse 纯化水冲洗	At room temperature室温	1-2min
5	Step two : Passivation 漂洗第二步：钝化	3-5%, CIP Protect solution溶液	65-75 ℃	Re-circulation循环60min
6	Step three: 漂洗第三步	Use PW to rinse 纯化水冲洗	At room temperature室温	1-2min
7	Step four: 漂洗第四步	Use PW to rinse 纯化水冲洗	At room temperature室温	1-2min
8	Step five: 漂洗第五步	Use PW to rinse 纯化水冲洗	At room temperature室温	1-2min
9	Sanitization 消毒或者灭菌	Medical sanitization or PS sanitization 化学消毒或者高温蒸汽灭菌	Room tem. or室温或者 125-140℃	According to the requirement 按照需要（不建议使用含氯类消毒剂）

喷淋球覆盖范围测试 Spray ball coverage test

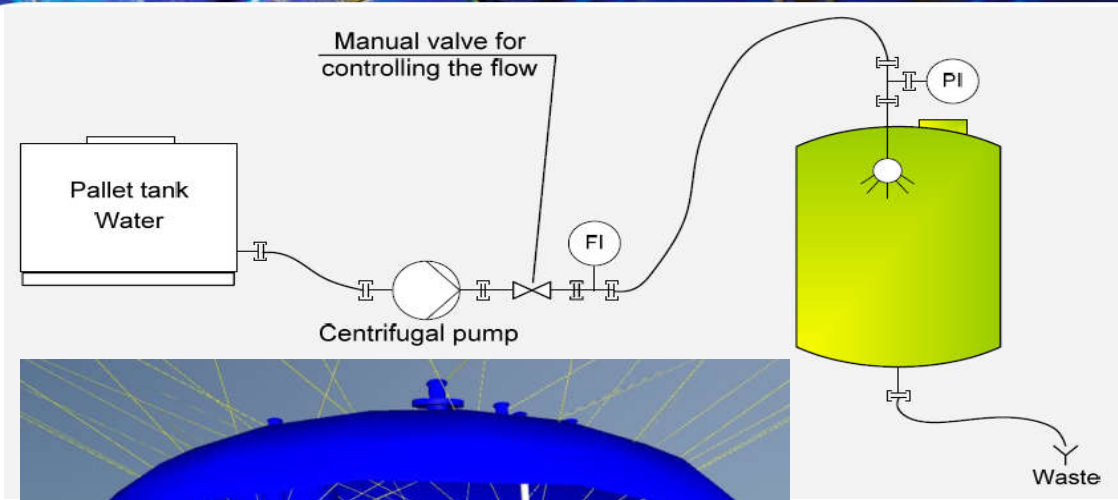

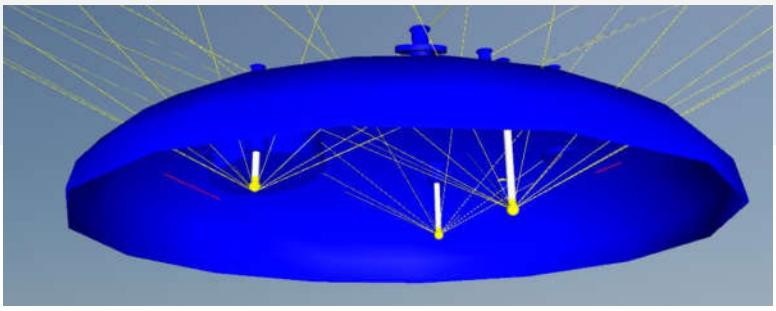

喷淋测试流程示意图

Introduction of spray ball coverage test

FAT

❖ E阀门安装角度检查Installation valve and angle inspection

在水平管路上安装的隔膜阀，生产商必须明确需要安装的角度（如果不能以其他方式排水）。测量的误差不需考虑。

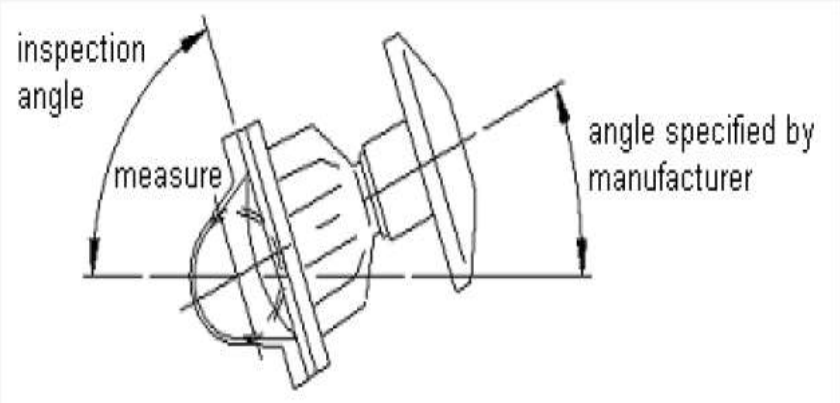

FAT

F 空气隔断的检查Air break inspection

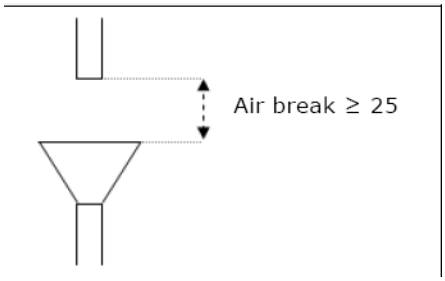

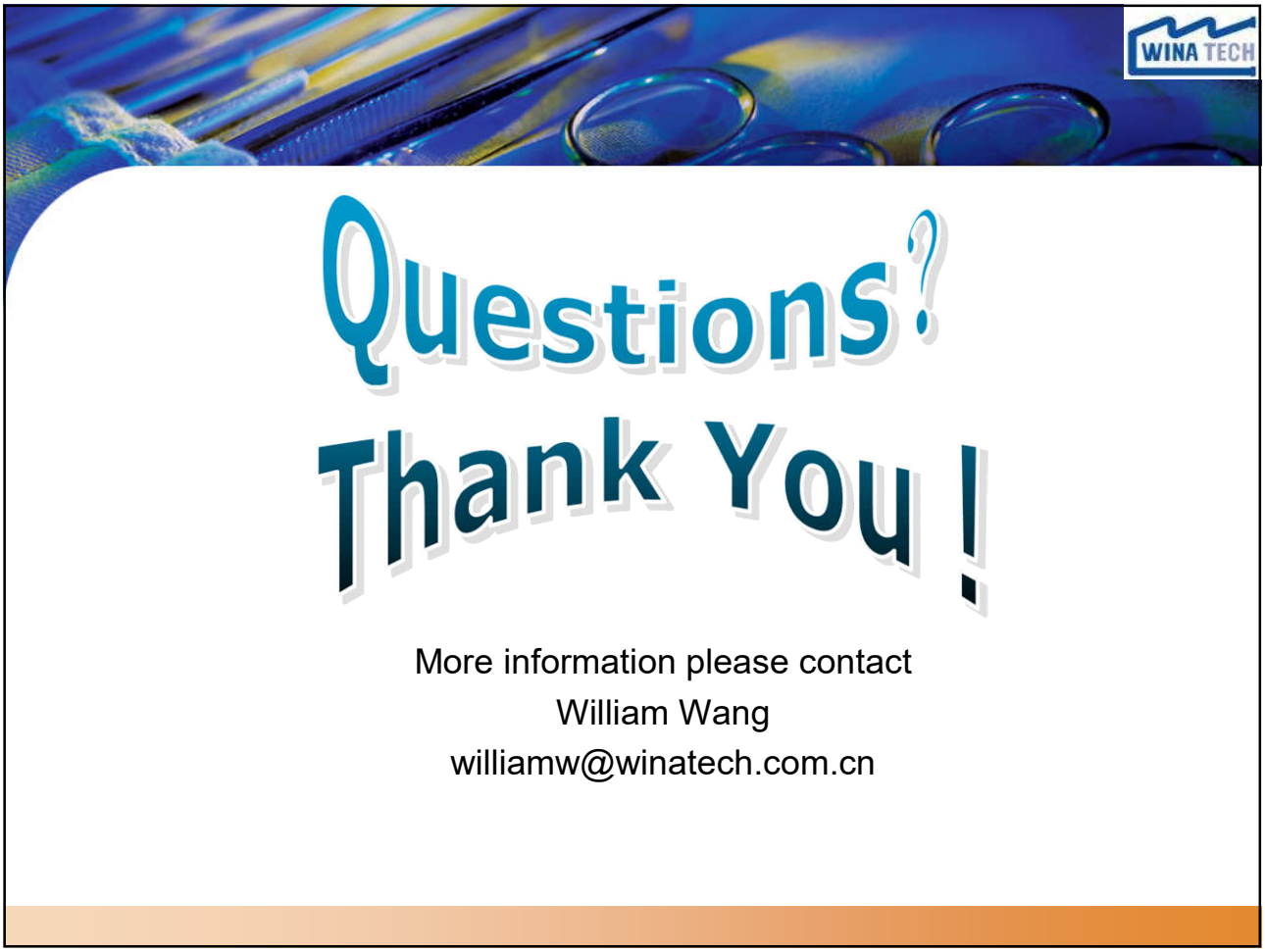
WINA TECH
Questions?
Thank You !
More information please contact
William Wang
williamw@winatech.com.cn